EXPERIMENT NO :6

NAME OF THE EXPERIMENT : PETROLEUM DISTILLATION

PURPOSE OF THE EXPERİMENT

Determine the boiling temperature ranges of petroleum products and characterize petroleum products.

THEORIES OF THE EXPERIMENT

Crude oil distillation is the starting point for petroleum refining and its main purpose is to separate the crude oil, which is a mixture of various hydrocarbons, into different parts with common boiling points. This decomposition process, known as distillation, is a physical phenomenon and is progressively made from low boiling point light products to high boiling point heavy products. Distillation tests provide information on the quality and content of petroleum products. These tests are used to compare the yields and qualities of different types of petroleum products. The distillation method is one of the oldest methods used because it is a significant effect of distillation characterization of hydrocarbons in terms of safety and performance in fuel and solvents.

Three types of distillation are performed in the laboratory to determine the boiling range of the products and to gather the necessary information for the design. Real boiling point (TBP) distillation, ASTM distillation, equilibrium vapor separation (EFV) distillation. True Boiling Point Distillation (TBP):

TBP distillation separates all the components in the mixture by using too many separation steps and a very high recirculation rate.

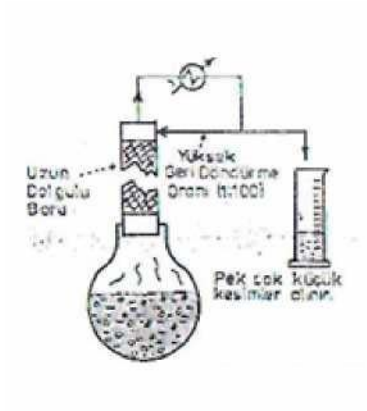

Şekil 1. True Boiling Point Distillation ASTM Distillation:Boyutları ASTM tarafından is distilled by taking 100 mL of crude oil or any petroleum fraction in a standardized distillation and cooling apparatus.

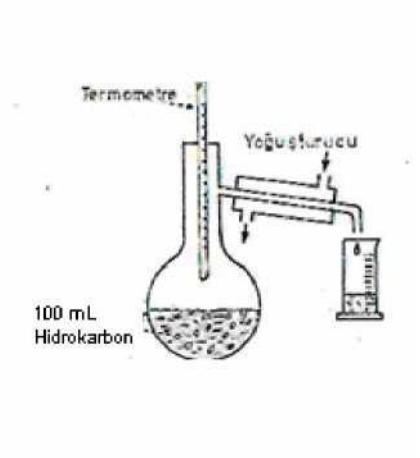

Picture 2. ASTM Distillation

Equilibrium Flash Distillation (EFV):

Steam and liquid remain in contact with a device similar to Picture 3 until the desired degree of evaporation is achieved and this mixture is separated into gas and liquid phases.

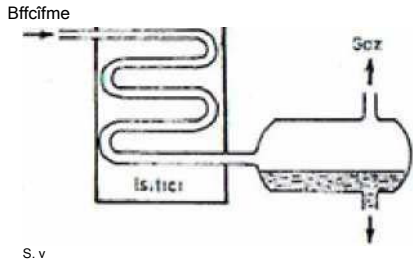

Picture 3 . Dengede Buhar Ayırma Distilasyonu

Generally, after distillation, seven different fractions occur. These fractions are;

1. Gas, Boiling range: <15,5 0C

2. Gasoline (Light Naphtha), Boiling range: 15.5-149 ^{0}C

3. Kerosine (middle naphtha), Boiling range: 149-232 ^{0}C

4. Gas Oil, Boiling range: 232-343 ^{0}C

5. Light vacuum kerosene, Boiling range: 343-371^{0}C

6. Heavy vacuum gas oil, Boiling range: 371-566 ^{0}C

7. Waste, Boiling range:> 566^{0}C

EQUİPMENT SETUP AND PROCEDURE

ISL AD86 5G petrol distilasyon düzeneğinin ön ve arka panellerinin görünümü şekil 4 ve şekil 5'de verilmektedir.

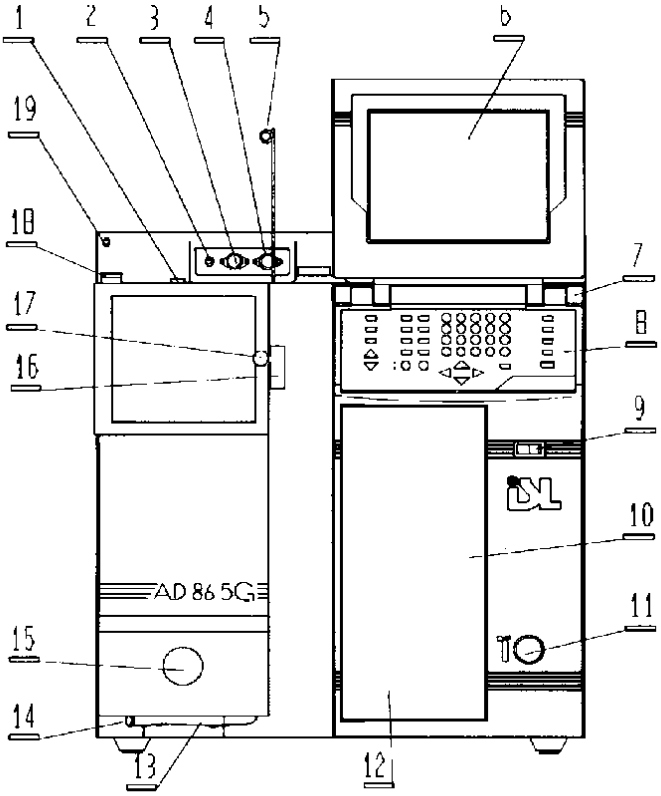

Şekil 4. Cihazın Önden Görünüşü

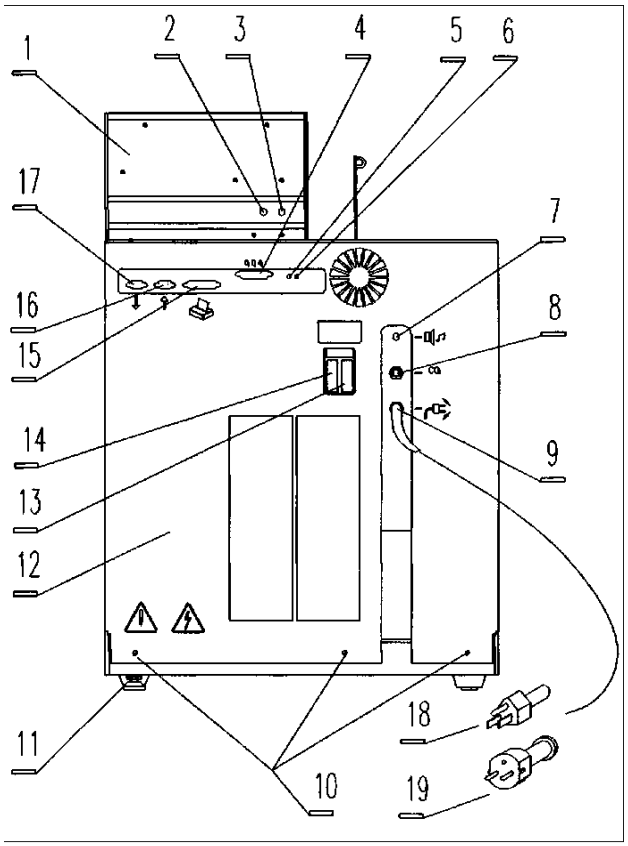

Şekil 5. Cihazın Arkadan Görünüşü

COMPUTATION

First Boiling Point Last	.....^{0}C
Boiling Point Remaining	.....^{0}C
Volume (waste)	.....mL (A)
Distilat	.....mL (B)
Total Volume	100 mL (C)

Çizelge 1. Percentage of evaporated product and temperature data.

% Evaporation	T (°C)

RESULT AND CONCLUSION

- What is the average boiling point interval of the sample?
- What is the reason for the low yield in the sample
- Why the losses in the sample can be welded
- How is loss and loss of efficiency known to be reduced?
- Discuss the fuel characteristics of the sample
- Draw a graph of the percentage of product obtained versus temperature

SORULAR

1- What is oil distillation? How is it done?

2. What is the reason for using EFV as petroleum distillation method?

3. What are the differences between petroleum distillation methods?

4. What are the parameters that influence the method selection in petroleum distillation?

5. What are the advantages of applying ASTM standards in petroleum analysis?

REFERENCES

KULELİ Ö., *Petrol Arıtım Teknolojisi,* Çağlayan Kitapevi, İstanbul, 1981.
YORULMAZ Ö., *Petrol İşleme Teknolojisi ve Rafineri Üniteleri,* ODTÜ Mühendislik Fakültesi Yayınları, Yayın No:71, 1982, Ankara.
SPEIGHT, J.G., *Handbook of Petroleum Product Analaysis,* John Wiley and Sons Inc., 2002, USA.
SPEIGHT, J.G., *Handbook of Petroleum Analaysis,* John Wiley and Sons Inc., 2001, USA.