EXPERIMENT TITLE: SHELL AND TUBE HEAT EXCHANGERS, JACKETED VESSEL WITH COIL AND STIRRER
INSTRUCTION MANUAL

OBJECTIVE

The objectives of the experiment are:

- To demonstrate indirect heating or cooling by transfer of heat from one fluid stream to another when separated by a solid wall (fluid to fluid heat transfer).
- To perform energy balances across heat exchangers and calculate overall efficiency at different hot fluid inlet temperatures and flow rates.
- To demonstrate the differences between cocurrent and countercurrent flows and the effect on the heat transferred, temperature efficiencies and temperature profiles through shell and tube heat exchanger.
- To determine the overall heat transfer coefficients using the logarithmic mean temperature differences to perform the calculations.
- To investigate the effect of changes in hot and cold fluid flow rates on the temperature efficiencies and overall heat transfer coefficients.
- To investigate the effect of driving force with cocurrent and countercurrent flow patterns for shell and tube heat exchanger.
- To compare the heat transfer efficiencies and overall heat transfer coefficients between external jacket and submerged coil.

THEORY AND PRINCIPLES

Heat exchangers are devices designed to transfer heat between two or more fluids, i.e., liquids, vapors, or gases of different temperatures. Depending on the type of heat exchanger employed, the heat transferring process can be gas-to-gas, liquid-to-gas, or liquid-to-liquid and occur through a solid separator, which prevents mixing of the fluids, or direct fluid contact. Other design characteristics, including construction materials and components, heat transfer mechanisms, and flow configurations also help to classify and categorize the types of heat exchangers available. Finding application across a wide range of industries, a diverse selection of these heat exchange devices are designed and manufactured for use in both heating and cooling processes.

Heat exchangers work by passing a hot fluid and a cold fluid across opposite or same sides of a piece of metal. The heat from one fluid passes across the metal (which is thermally conductive) into the other fluid without direct contact of fluids. High fluid velocity, high turbulence, high surface area and a large temperature differential all contribute to more efficient heat transfer. All heat exchangers operate under the same basic principles. However, these devices can be classified and categorized in several different ways based on their design characteristics. The main characteristics by which heat exchangers can be categorized include flow configuration, construction method and heat transfer mechanism. Based on the design characteristics, there are several different variants of heat exchangers available and some of the more common variants employed throughout industry include shell and tube heat exchangers, double pipe heat exchangers, plate heat exchangers, condensers, evaporators, and boilers. Heat exchangers are widely used in space heating, refrigeration, air conditioning, power stations, chemical plants, petrochemical plants, petroleum refineries, natural-gas processing, and sewage treatment.

The most common type of heat exchangers, shell and tube heat exchangers are constructed of a single tube or series of parallel tubes (i.e., tube bundle) enclosed within a sealed, cylindrical pressure vessel (i.e., shell). The design of these devices is such that one fluid flows through the smaller tube(s), and the other fluid flows around its/their outside(s) and between it/them within the sealed shell. Other design characteristics available for this type of heat exchanger include finned tubes, single or two-phase heat transfer, countercurrent flow, cocurrent flow, or crossflow arrangements, and single, two, or multiple pass configurations. Heating or cooling of a process fluid in a tank is common practice in industry. Jacketed vessel is a container that is designed for controlling temperature of its contents, by using a cooling or heating "jacket" around the vessel through which a cooling or heating fluid is circulated. A jacket is a cavity external to the vessel that permits the uniform exchange of heat between the fluid circulating in it and the walls of the vessel. Sometimes a submerged coil inside the vessel is employed to heat or cool the process fluid in the vessel.

EQUIPMENTS AND EXPERIMENTAL METHODS

Heat exchange equipments must be used in conjunction with an Armfield HT30XC Heat Exchange Service Unit, which provides variable flow rate streams of hot and cold water along with appropriate instrumentation for the heat exchanger (Figure 1).

The HT30XC Service unit should be connected to a computer on which the suitable software has been installed. All the variables such as temperature, flow rate and stirring rate of the heat exchange equipments are controlled and monitored via the software.

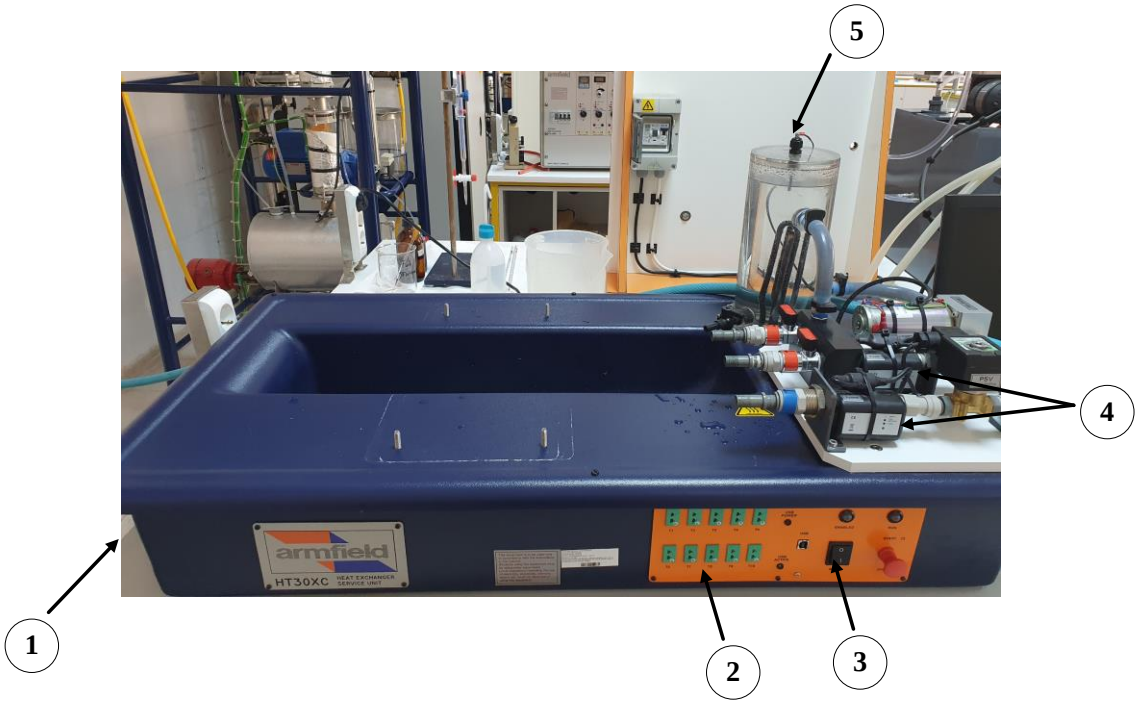

Figure 1. HT30XC Service unit (1: service unit, 2: thermocouple plugs, 3: power switch, 4: flow meters, 5: hot water vessel)

Shell and Tube Heat Exchanger

This type of exchanger consists of a number of tubes in parallel enclosed in a cylindrical shell. Heat is transferred between one fluid flowing through the tubes and another fluid flowing through the cylindrical shell around the tubes. Baffles mounted inside the shell is used to increase the velocity of the fluid and hence the rate of the heat transfer.

The shell and tube heat exchanger is mounted on a PVC base plate which is used to locate the exchanger on four studs at the left hand of the HT30CX service unit. The PVC end housings incorporate the necessary fitting sensors to measure the fluid temperatures and connections to the hot and cold water supplies. The four thermocouple temperature sensors are labelled as T1 to T4 for identification and each lead is terminated with a miniature thermocouple plug connection to the appropriate socket on the left hand side of the console on the service unit. Seven stainless steel tubes with an outer diameter of 6.35 mm and a wall thickness of 0.6 mm are installed into an acrylic tube (shell) with an inner diameter of 39 mm and a wall thickness of 3 mm. Two baffles made from acrylic are installed inside the shell. In normal operation, the hot fluid from the hot water circulator enters the header at one end of the shell and passes through the bundle of stainless

steel tubes. The fittings on the HT30XC service unit and HT33 are color coded red for hot water and blue for cold water to aid identification. Hot and cold fluid flows may be configured for either cocurrent or countercurrent operation.

A picture and schematic plan view of shell and tube heat exchanger are given in Figure 2 and 3, respectively.

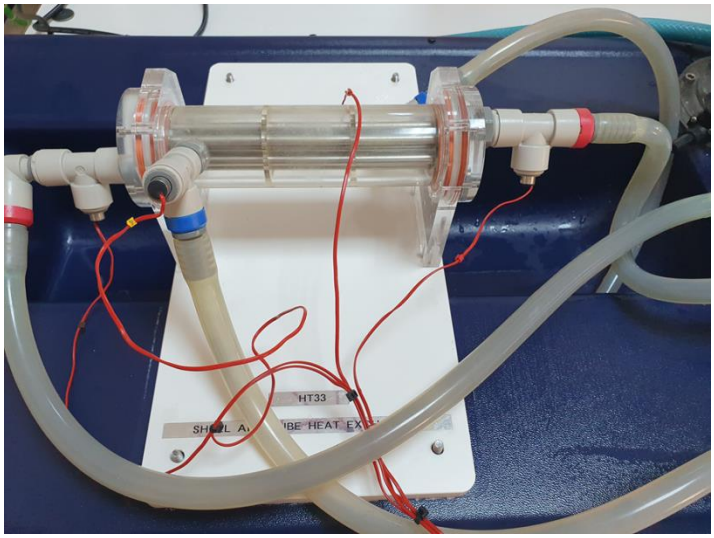

Figure 2. HT33 Shell and Tube Heat Exchanger

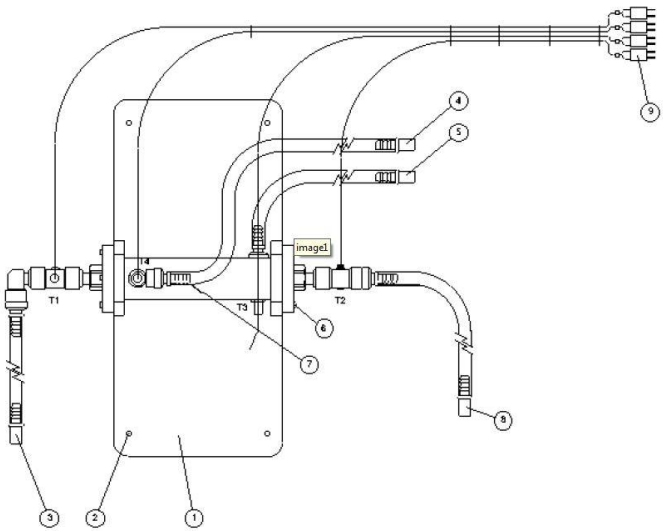

Figure 3. Plan view of HT33 Shell and Tube Heat Exchanger

Experimental Procedure:

- Check that the HT30XC service unit and Armfield HT33 range software have been installed on the computer.

- HT33 shell and tube heat exchanger is mounted on the HT30XC Service unit using thumb nuts to secure the system.
- 4 thermocouple temperature sensors labelled from T1 to T4 are plugged into the correct locations on the Service unit.
- The heat exchanger is configured in a way that hot water passes from the inner tube bundle and cold water passes from the shell side according to the desired flow direction (cocurrent or countercurrent). Flexible tubings on the HT33 to the quick-release fittings are connected as a countercurrent operation. Cocurrent is achieved by changing the direction of the pump on the HT33 software.
- The power button on the service unit and the PC are switched on. The HT33 software is run by selecting the appropriate direction of the flow.
- Cold water is supplied from tap water while the hot water is supplied from the hot water vessel.
- The temperature of the hot water inlet is set to the desired temperature on the software.
- The hot water flow rate is set to the desired value on the software.
- The cold water flow rate is adjusted to the desired value on the software and the tap water valve manually.
- Temperature and flow rate values are recorded in every ten seconds on a results sheet and once the temperature values stabilize, the experiment is stopped and the data in the table is used for the calculations.
- The data on the results sheet are saved by selecting “Save” or “Save as” from the “File” menu.
- The experiment is repeated for different hot water inlet temperatures, hot and cold water flow rates and flow direction. A new results sheet is created for each set of data.

In normal countercurrent operation, the flexible connections are as follows:

Hot water inlet temperature (ºC)	T1
Hot water outlet temperature (ºC)	T2
Hot water inlet temperature (ºC)	T3
Cold water outlet temperature (ºC)	T4

In cocurrent operation, the flexible connections are as follows:

Hot water outlet temperature (ºC)	T1
Hot water inlet temperature (ºC)	T2
Cold water inlet temperature (ºC)	T3
Cold water outlet temperature (ºC)	T4

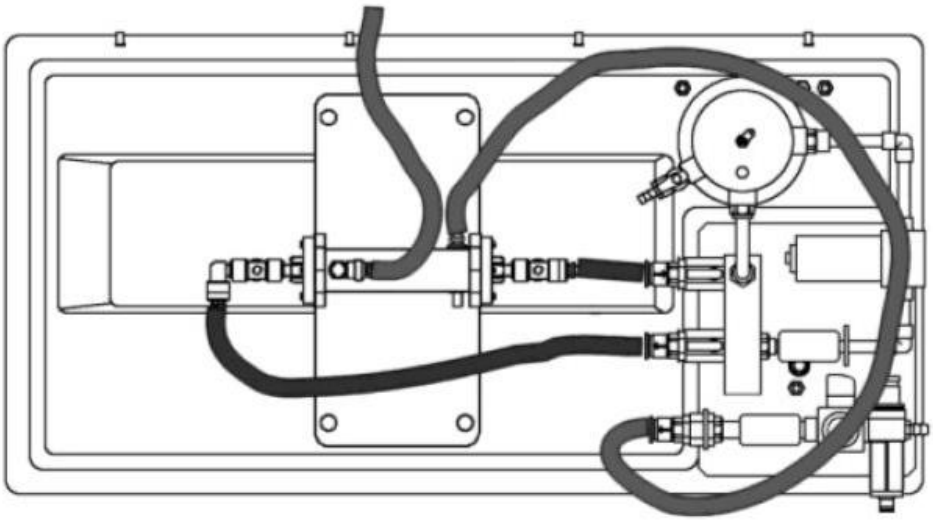

Figure 4. Cocurrent connection of the heat exchanger

The following experiments will be carried out for shell and tube heat exchanger:

1. *Effect of hot fluid inlet temperature:*

Flow direction	**$T_{hot, inlet}$ (ºC)**	**F_{hot} (L/min)**	**F_{cold} (L/min)**
Countercurrent	50	2	2
Countercurrent	60	2	2

Experiment is repeated for different hot fluid inlet temperatures keeping the flow rates constant.

2. *Effect of cold fluid flow rate:*

Flow direction	**$T_{hot, inlet}$ (ºC)**	**F_{hot} (L/min)**	**F_{cold} (L/min)**
Countercurrent	50	2	1
Countercurrent	50	2	2

Experiment is repeated for different cold fluid flow rates keeping the inlet temperature and the flow rate of the hot fluid constant.

3. *Effect of hot fluid flow rate:*

Flow direction	**$T_{hot, inlet}$ (°C)**	**F_{hot} (L/min)**	**F_{cold} (L/min)**
Countercurrent	50	2	2
Countercurrent	50	3	2

Experiment is repeated for different hot fluid flow rates keeping the inlet temperature of hot fluid and flow rate of the cold fluid constant.

T1, T2, T3, T4, F_{hot} and F_{cold} values are recorded for every set of data as soon as the system reaches steady state. All the experiments are repeated for cocurrent flow.

Jacketed Vessel with Coil and Stirrer

The vessel consists of a stainless steel wall with a heat resistant glass outer jacket and an internal stainless steel coil. The vessel incorporates a stirrer to ensure a homogenous temperature distribution during the operation and baffle arrangement to allow thorough mixing of the vessel contents when required. Hot water is introduced from the jacket while the cold fluid is fed into the vessel. Alternatively, cold fluid in the vessel can be heated with the hot fluid circulating inside the coil submerged in the vessel. The minimum and maximum capacities of the vessel are 1 L and 2 L, respectively. The cold fluid is drained from the overflow tube in the vessel.

HT34 Jacketed Vessel with Coil and Stirrer is mounted on a PVC base plate having four holes which locate it on four studs at the left hand of the HT30CX service unit. The six thermocouple temperature sensors are labelled from T1 to T6 for identification and each lead is terminated with a miniature thermocouple plug connection to the appropriate socket on the left hand side of the console on the service unit.

A picture and schematic plan view of the jacketed vessel with coil and stirrer are given in Figure 5 and 6, respectively.

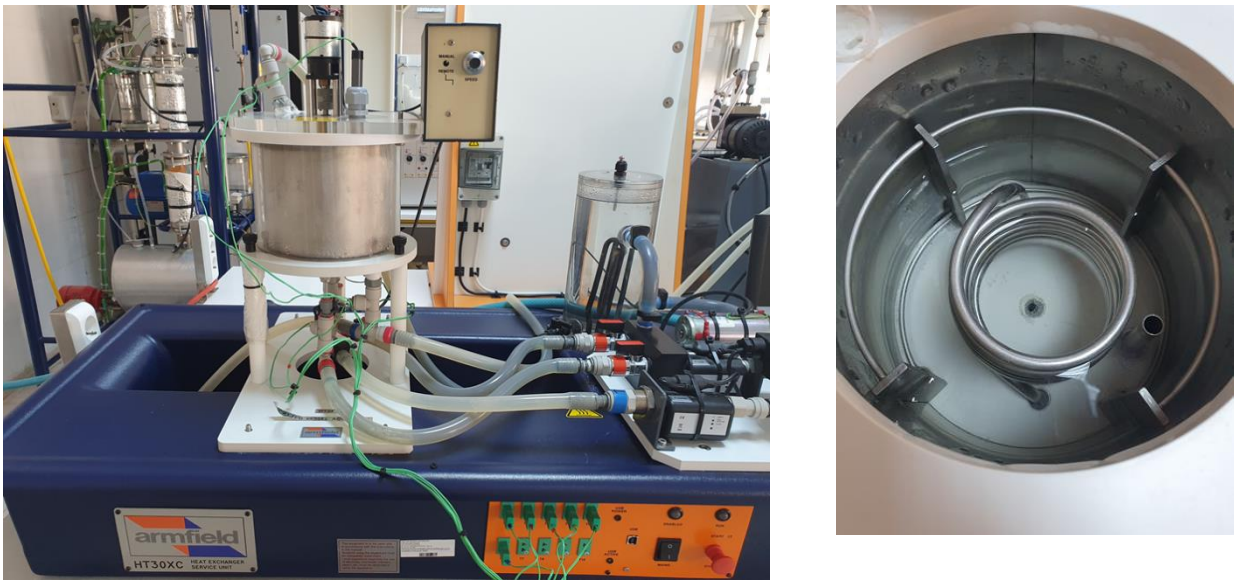

(a) (b)

Figure 5. (a) HT34 Jacketed Vessel with Coil and Stirrer, (b) inner image of the vessel

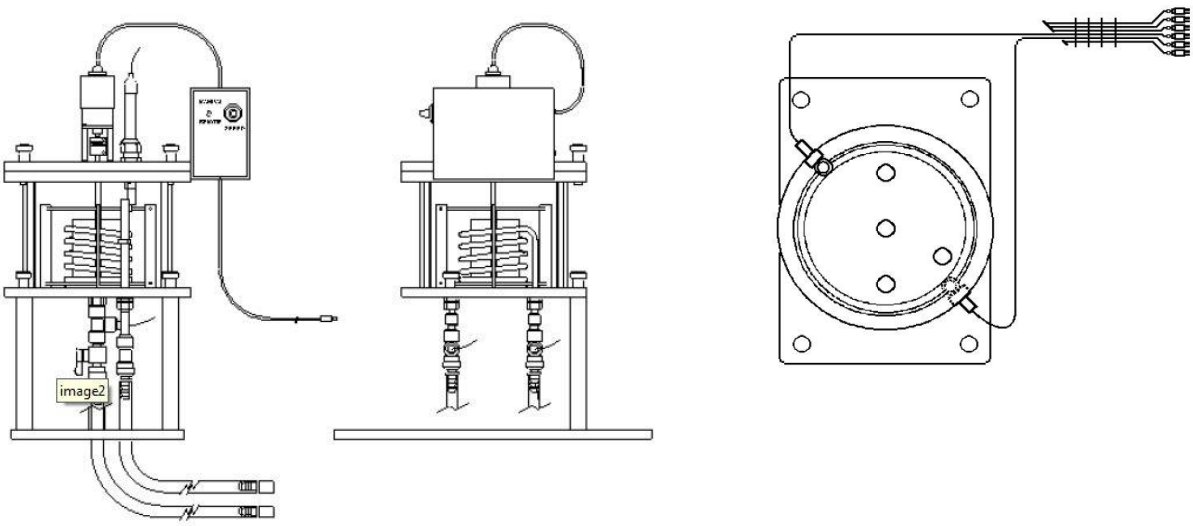

Figure 6. Plan view of HT34 Jacketed Vessel with Coil and Stirrer

The HT34 allows heat exchange either using an external jacket surrounding the vessel, or a coil submerged in the process fluid (Figure 7).

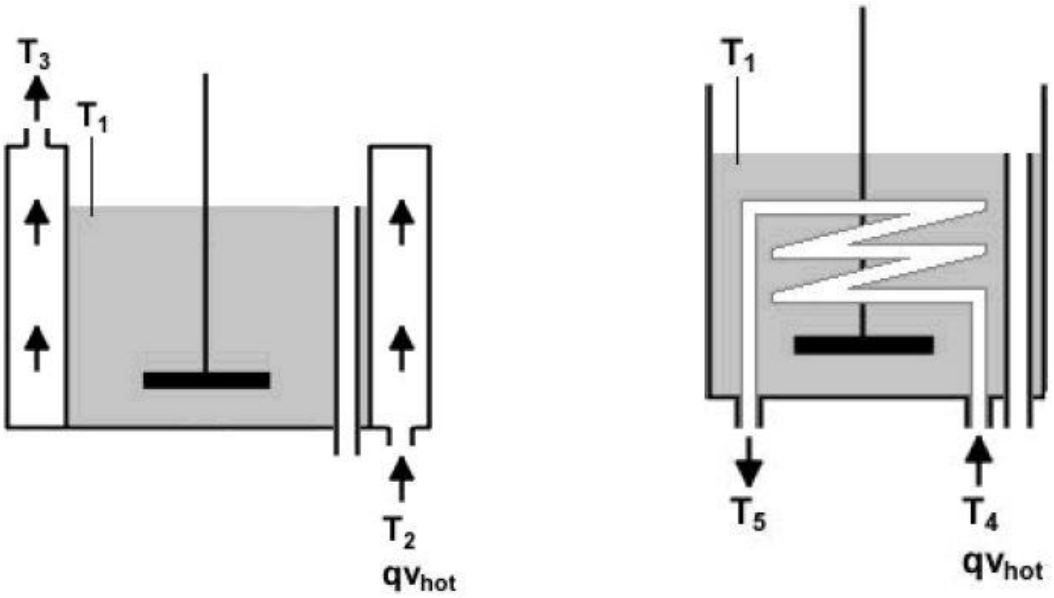

(a) (b)

Figure 7. A schematic diagram of HT34 (a) using the outer jacket, (b) using the submerged coil

When using the outer jacket to heat the vessel contents, the flexible connections are as follows (Figure 8):

Hot water inlet temperature	T2
Hot water outlet temperature	T3
Cold water inlet temperature	T6
Cold water outlet temperature	T1

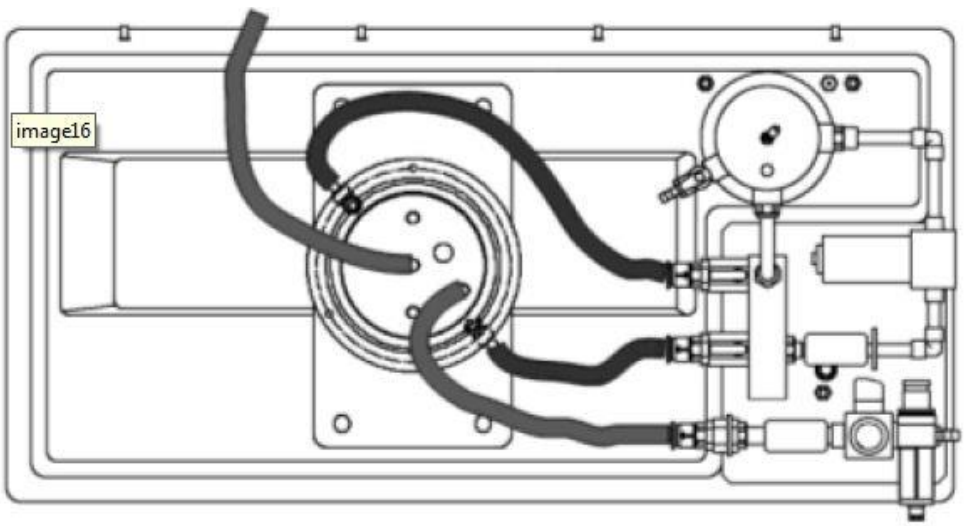

Figure 8. Connection of the vessel using the outer jacket

When using the submerged coil to heat the vessel contents, the flexible connections are as follows (Figure 9):

Hot water inlet temperature	T4
Hot water outlet temperature	T5
Cold water inlet temperature	T6
Cold water outlet temperature	T1

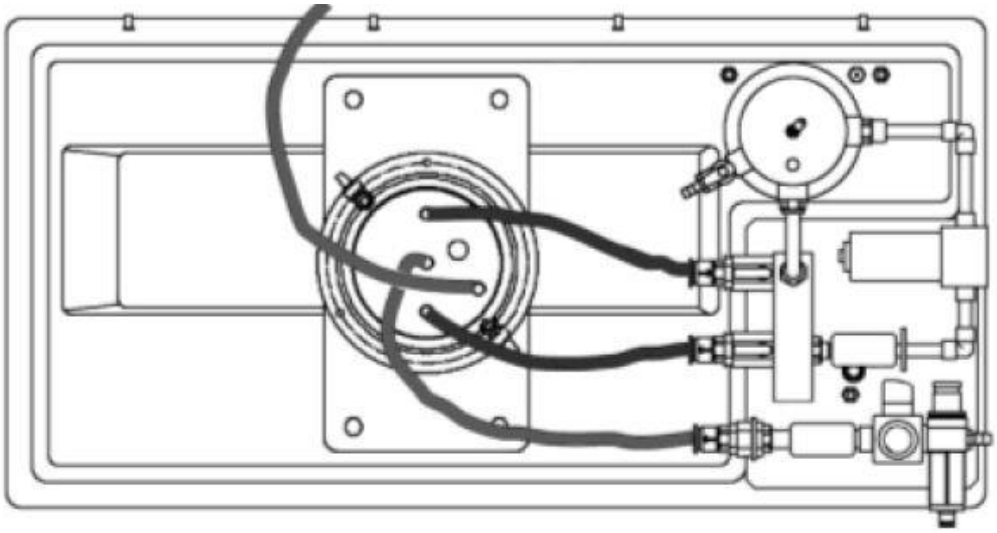

Figure 9. Connection of the vessel using the submerged coil

Experimental Procedure:

- Check that the HT30XC service unit is connected to the PC using the USB cable provided, and that the PC is switched on and the software has been installed on the computer.
- HT34 Jacketed Vessel with Coil and Stirrer is mounted on the HT30XC Service unit using thumb nuts to secure the system.
- 6 thermocouple temperature sensors labelled from T1 to T6 are plugged into the correct locations on the Service unit.
- The heat exchanger is configured in a way that hot water passes from the inner jacket or coil and cold water fills the vessel and overflows from the overflow tube.
- Cold water is supplied from tap water while the hot water is supplied from the hot water supply tank.
- The power button on the service unit and the PC are switched on. The HT34 software is run and the power and the stirrer buttons are clicked on the screen.

- The temperature of the hot water inlet is set to the desired temperature on the software.
- The hot water flow rate is set to the desired value on the software.
- The cold water flow rate is adjusted to the desired value on the software and the tap water valve manually.
- Temperature and flow rate values are recorded in every ten seconds on a results sheet and once the temperature values stabilize, the experiment is stopped and the data in the table is used for the calculations.
- The data on the results sheet are saved by selecting “Save” or “Save as” from the “File” menu.
- The experiment is repeated for different hot water inlet temperature, hot and cold water flow rates. A new results sheet is created for each set of data.

The following experiments will be carried out for jacketed vessel with outer jacket:

1. *Effect of hot fluid inlet temperature:*

Flow direction	**$T_{hot, inlet}$ (°C)**	**F_{hot} (L/min)**	**F_{cold} (L/min)**
Countercurrent	50	2	2
Countercurrent	60	2	2

Experiment is repeated for different hot fluid inlet temperatures keeping the flow rates constant.

2. *Effect of cold fluid flow rate:*

Flow direction	**$T_{hot, inlet}$ (°C)**	**F_{hot} (L/min)**	**F_{cold} (L/min)**
Countercurrent	50	2	1
Countercurrent	50	2	2

Experiment is repeated for different cold fluid flow rates keeping the inlet temperature and flow rate of the hot fluid constant.

3. *Effect of hot fluid flow rate:*

Flow direction	**$T_{hot, inlet}$ (°C)**	**F_{hot} (L/min)**	**F_{cold} (L/min)**
Countercurrent	50	2	2
Countercurrent	50	3	2

Experiment is repeated for different hot fluid flow rates keeping the inlet temperature of hot fluid and flow rate of the cold fluid constant.

T1, T2, T3, T6, F_{hot} and F_{cold} values are recorded for every set of data as soon as the system reaches steady state. All the experiments are repeated for submerged coil.

CALCULATIONS

Shell and Tube Heat Exchanger

Overall heat transfer efficiency and heat transfer coefficient are calculated for each set of data for steady state conditions.

Total energy balance and overall efficiency are performed for each set of data.

Density and C_p values of hot and cold fluids are provided from the reference tables.

Configuration of the heat exchanger with two streams flowing in opposite directions (countercurrent flow) or in parallel (cocurrent flow) along with the corresponding temperature profiles are given in Figure 10.

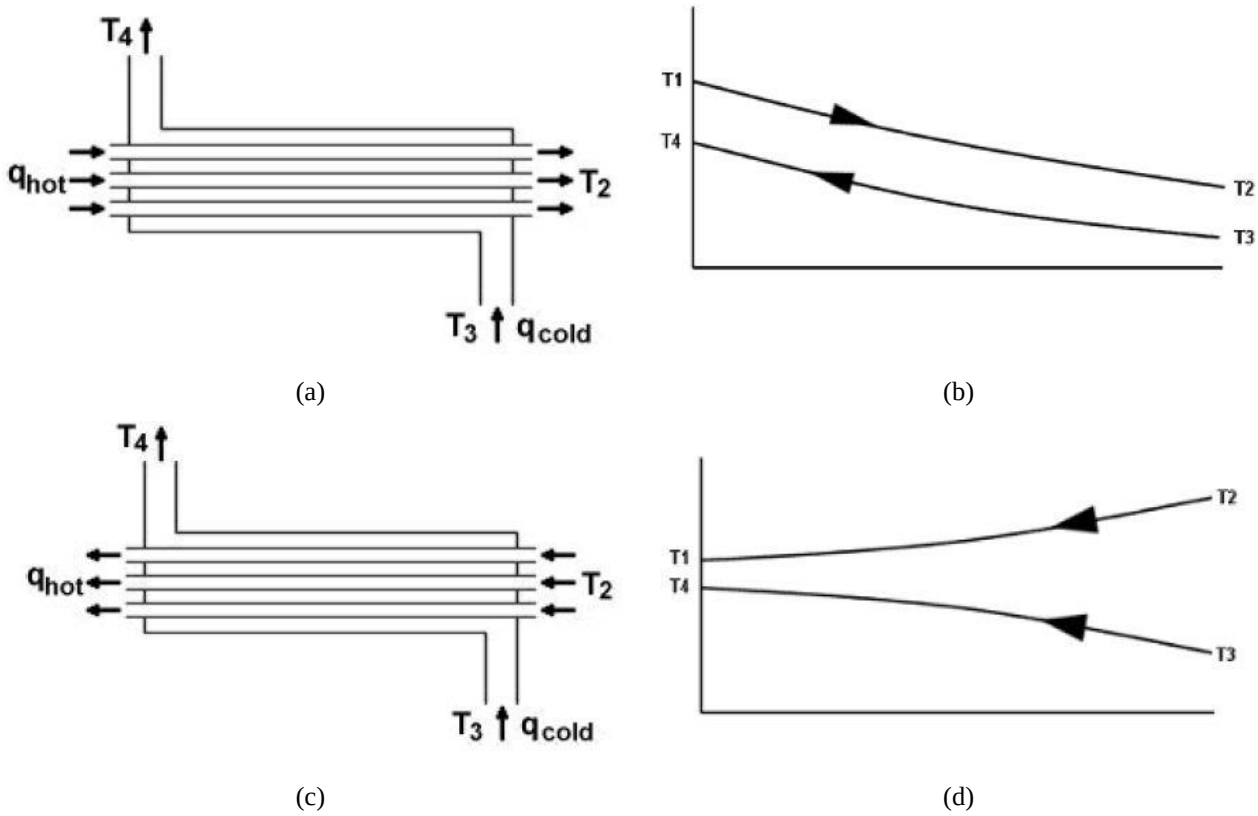

Figure 10. (a) Flow direction and (b) Temperature profile for countercurrent operation, (c) Flow direction and (d) Temperature profile for cocurrent operation

<u>If countercurrent flow is used:</u>

ΔT_h=T1-T2 and ΔT_c=T4-T3,

T1: Hot fluid inlet temperature (ºC)

T2: Hot fluid outlet temperature (ºC)

T3: Cold fluid inlet temperature (ºC)

T6: Cold fluid outlet temperature (ºC)

Volumetric flow rates of hot and cold fluids are converted to mass flow rates using the following equation.

$$Mass\ flow\ rate\ (q_m)\left(\frac{kg}{s}\right) = Volumetric\ flow\ rate\ (q_v)\left(\frac{m^3}{s}\right) x density\ of\ the\ fluid\ (\frac{kg}{m^3})$$

$$Q\ (heat\ flow)$$
$$= q_m(mass\ flow\ rate) x C_p(specific\ heat\ capacity) x \Delta T(temperature\ difference)$$

Heat power emitted from hot fluid: $Q_e = q_{m,h} x C_{p,h} x (T1 - T2)$

Heat power absorbed by cold fluid: $Q_a = q_{m,c} x C_{p,c} x (T4 - T3)$

Heat power lost (or gained): $Q_f = Q_e - Q_a$

Overall system efficiency: $\eta = \left(\frac{Q_a}{Q_e}\right) x(100\%)$

Heat efficiency for hot fluid: $\eta_h = \left(\frac{T1-T2}{T1-T3}\right) x100\%$

Heat efficiency for cold fluid: $\eta_c = \left(\frac{T4-T3}{T1-T3}\right) x100\%$

Average heat efficiency: $\eta_m = [(\eta_h + \eta_c)/2]x100\%$

<u>If cocurrent flow is used;</u>

ΔT_h=T2-T1 and ΔT_c=T4-T3

T1: Hot water outlet temperature (ºC)

T2: Hot water inlet temperature (ºC)

T3: Cold water inlet temperature (ºC)

T4: Cold water outlet temperature (ºC)

Volumetric flow rates of hot and cold fluids are converted to mass flow rates using the following equation.

$$Mass\ flow\ rate\ (q_m)\left(\frac{kg}{s}\right) = Volumetric\ flow\ rate\ (q_v)\left(\frac{m^3}{s}\right) x density\ of\ the\ fluid\ (\frac{kg}{m^3})$$

$$Q\ (heat\ flow)$$
$$= q_m(mass\ flow\ rate) x C_p(specific\ heat\ capacity) x \Delta T(temperature\ difference)$$

Heat power emitted from hot fluid: $Q_e = q_{m,h} x C_{p,h} x (T2 - T1)$

Heat power absorbed by cold fluid: $Q_a = q_{m,c} x C_{p,c} x (T4 - T3)$

Heat power lost (or gained): $Q_f = Q_e - Q_a$

Overall system efficiency: $\eta = \left(\frac{Q_a}{Q_e}\right) x(100\%)$

Heat efficiency for hot fluid: $\eta_h = \left(\frac{T2-T1}{T2-T3}\right) x100\%$

Heat efficiency for cold fluid: $\eta_c = \left(\frac{T4-T3}{T2-T3}\right) x100\%$

Average heat efficiency: $\eta_m = [(\eta_h + \eta_c)/2]x100\%$

Logarithmic mean temperature difference (LMTD) and overall heat transfer coefficient are calculated from the following equations.

$$\Delta Tlm = \frac{\Delta T_1 - \Delta T_2}{ln\left(\frac{\Delta T_1}{\Delta T_2}\right)}$$

$\Delta T_1 = T2 - T3$

$\Delta T_2 = T1 - T4$

Overall heat transfer coefficient: $U(\frac{W}{m^2K}) = \frac{Q_e}{(Ax\Delta T_{lm})}$

Heat transfer area: $A\ (m^2) = \pi x d_m x L$

$d_m = (d_o + d_i)/2$

Heat transmission length: $L = nxl$

Equipment Specifications:

Inner tube inside diameter (m)	d_i	0.00515
Inner tube outside diameter (m)	d_o	0.00635
Heat transmission length (m)	L	1.008
Length (m)	l	0.144
Number of tubes	n	7

Jacketed Vessel with Coil and Stirrer

Total energy balance and overall efficiency for the jacketed vessel equipment are performed for different hot water inlet temperatures and cold and hot water flow rates.

Density and C_p values of hot and cold fluids are provided from the reference tables.

<u>If the vessel is heated using the outer jacket:</u>

ΔT_1=T2-T1 and ΔT_2=T3-T1,

T2: Hot fluid inlet temperature (ºC)

T3: Hot fluid outlet temperature (ºC)

T1: Vessel contents temperature (ºC)

Volumetric flow rates of hot and cold fluids are converted to mass flow rates using the following equation.

$$Mass\ flow\ rate\ (q_m)\left(\frac{kg}{s}\right) = Volumetric\ flow\ rate\ (q_v)\left(\frac{m^3}{s}\right) x density\ of\ the\ fluid\ (\frac{kg}{m^3})$$

$$Q\ (heat\ flow)$$
$$= q_m(mass\ flow\ rate)xC_p(specific\ heat\ capacity)x\Delta T(temperature\ difference)$$

Heat power emitted from hot fluid: $Q_e = q_{m,h}xC_{p,h}x(T2 - T3)$

Heat power absorbed by cold fluid: $Q_a = q_{m,c}xC_{p,c}x(T1 - T6)$

Heat power lost (or gained): $Q_f = Q_e - Q_a$

Overall system efficiency: $\eta = \left(\frac{Q_a}{Q_e}\right)x(100\%)$

Logarithmic mean temperature difference (LMTD) and overall heat transfer coefficient are calculated from the following equations.

$$\Delta Tlm = \frac{\Delta T_1 - \Delta T_2}{ln\left(\frac{\Delta T_1}{\Delta T_2}\right)}$$

$$\Delta T_1 = T2 - T3$$

$$\Delta T_2 = T1 - T4$$

Overall heat transfer coefficient: $U(\frac{W}{m^2K}) = \frac{Q_e}{(Ax\Delta T_{lm})}$

Heat transfer area: $A\ (m^2) = \pi x d_m x L$

$$d_m = (d_o + d_i)/2$$

<u>If the vessel is heated using the submerged coil:</u>

ΔT_1=T4-T1 and ΔT_2=T5-T1

T4: Hot fluid inlet temperature (ºC)

T5: Hot fluid outlet temperature (ºC)

T1: Vessel contents temperature (ºC)

Volumetric flow rates of hot and cold fluids are converted to mass flow rates using the following equation.

$$Mass\ flow\ rate\ (q_m)\left(\frac{kg}{s}\right) = Volumetric\ flow\ rate\ (q_v)\left(\frac{m^3}{s}\right) x density\ of\ the\ fluid\ (\frac{kg}{m^3})$$

$$Q\ (heat\ flow)$$
$$= q_m(mass\ flow\ rate)xC_p(specific\ heat\ capacity)x\Delta T(temperature\ difference)$$

Heat power emitted from hot fluid: $Q_e = q_{m,h}xC_{p,h}x(T4 - T5)$

Heat power absorbed by cold fluid: $Q_a = q_{m,c}xC_{p,c}x(T1 - T6)$

Heat power lost (or gained): $Q_f = Q_e - Q_a$

Overall system efficiency: $\eta = \left(\frac{Q_a}{Q_e}\right)x(100\%)$

Logarithmic mean temperature difference (LMTD) and overall heat transfer coefficient are calculated from the following equations.

$$\Delta Tlm = \frac{\Delta T_1 - \Delta T_2}{ln\left(\frac{\Delta T_1}{\Delta T_2}\right)}$$

$\Delta T_1 = T4 - T1$

$\Delta T_2 = T5 - T1$

Overall heat transfer coefficient: $U(\frac{W}{m^2K}) = \frac{Q_e}{(Ax\Delta T_{lm})}$

Heat transfer area: $A\ (m^2) = \pi x d_{coil,ave} x l$

$d_{coil,ave} = \left(d_{coil,i} + d_{coil,o}\right)/2$

Equipment Specifications:

Vessel wall inside diameter, d_i	m	0.01524
Vessel wall outside diameter, d_o	m	0.01542
Inside diameter of coiled tube, $d_{coil,\ i}$	m	0.00493
Outside diameter of coiled tube, $d_{coil,\ o}$	m	0.00635
Height of liquid in vessel, L	m	0.13
Length of the submerged coil, l	m	1.15

DISCUSSION

- What are the design parameters when a heat exchanger is to be designed? What parameters are observed in this experiment? Please discuss.
- How do the overall heat efficiency and overall heat transfer coefficient vary when only hot fluid inlet temperature is changed and other parameters are kept constant. Please discuss.
- How do the overall heat efficiency and overall heat transfer coefficient vary when only hot fluid flow rate is changed and other parameters are kept constant. Please discuss.
- How do the overall heat efficiency and overall heat transfer coefficient vary when only cold fluid flow rate is changed and other parameters are kept constant. Please discuss.
- How do the overall heat efficiency and overall heat transfer coefficient vary when only flow direction is changed and other parameters are kept constant. Please discuss.
- Interpret the effect of driving force (temperature difference between the hot and cold fluid streams) on the overall heat transfer coefficient and temperature efficiencies.
- Compare the overall heat efficiency for the jacketed vessel and vessel with coil considering all the design parameters.

  Interpret the results using the literature knowledge.

REFERENCES

Armfield HT33 and HT34 Instruction Manual.

Mccabe, W.L., Smith, J.C., Harriot, P., Unit Operations of Chemical Engineering, McGraw Hill, 6th Ed., 431-446.

Geankoplis, C., Transport Processes and Unit Operations, Prentice Hall, 3th Ed., 267.

REFERENCE TABLES

Table 1. Specific heat capacity of water (C_p, kJ/kgK)

°C	0	1	2	3	4	5	6	7	8	9
0	4.1274	4.2138	4.2104	4.2074	4.2045	4.2019	4.1996	4.1974	4.1954	4.1936
10	4.1919	4.1904	4.1890	4.1877	4.1866	4.1855	4.1846	4.1837	4.1829	4.1822
20	4.1816	4.1810	4.1805	4.1801	4.1797	4.1793	4.1790	4.1787	4.1785	4.1783
30	4.1782	4.1781	4.1780	4.1780	4.1779	4.1779	4.1780	4.1780	4.1781	4.1782
40	4.1783	4.1784	4.1786	4.1788	4.1789	4.1792	4.1794	4.1796	4.1799	4.1801
50	4.1804	4.1807	4.1811	4.1814	4.1817	4.1821	4.1825	4.1829	4.1833	4.1837
60	4.1841	4.1846	4.1850	4.1855	4.1860	4.1865	4.1871	4.1876	4.1882	4.1887
70	4.1893	4.1899	4.1905	4.1912	4.1918	4.1925	4.1932	4.1939	4.1946	4.1954

Table 2. Density of water (ρ, kg/m^3)

°C	0	2	4	6	8
0	999.8	999.9	999.9	999.9	999.9
10	999.7	999.5	999.2	998.9	998.6
20	998.2	997.8	997.3	996.8	996.2
30	995.7	995.0	994.4	993.7	993.0
40	992.2	991.4	990.6	989.8	988.9
50	988.0	987.1	986.2	985.2	984.2
60	983.2	982.2	981.1	980.0	978.9
70	977.8	976.6	975.4	974.2	973.0