INVESTIGATION OF SECOND ORDER REACTION IN A TUBULAR REACTOR AND CONTINUOUS STIRRED TANK REACTOR

OBJECTIVES

- To determine the rate constant using a Tubular Reactor
- To investigate the effect of throughput on conversion in a Tubular Reactor
- To demonstrate the temperature dependence of the reaction and the rate constant in a Tubular Reactor
- To find the reaction rate constant in a Continuous Stirred Tank Reactor
- To determine the effect of inadequate mixing on the reaction rate in a Continuous Stirred Tank Reactor
- Dynamic behaviour of Continuous Stirred Tank Reactors

THEORETICAL BACKGROUND

In Chemical Engineering many equipments are used in industrial processes to obtain the desired product. Chemical reactors are the hearth of the most systems producing almost all industrial chemicals. The reaction kinetics, the contacting pattern and the performance equation are should be known to determine the design parameters of a reactor. Temperature, pressure, and composition are apparent variables affecting the reaction rate in homogeneous systems. The rate of a reaction in terms of A is the number of moles of A reacting per unit time per unit volume . The rate constant for the nth-order reaction for a homogeneous system is written in the dimensions of $(\text{time})^{-1}(\text{concentration})^{1-n}$. The reaction rate, -rA, is an algebraic equation

$$A \rightarrow \text{products}$$

and may be a linear function of concentration

$$-r_A = kC_A$$

or may be some other algebraic function

$$-r_A = kC_A^2$$

The most common industrial reactors are batch, continuous- stirred tank (CSTR), tubular (PFR), and packed bed (PBR) reactors. Continuous flow reactors are operated at steady state. All designs start with the material balance which is expressed for any reactant or product as follows:

$$\begin{pmatrix}\text{rate of}\\ \text{reactant}\\ \text{flow into}\\ \text{element}\\ \text{of volume}\end{pmatrix} = \begin{pmatrix}\text{rate of}\\ \text{reactant}\\ \text{flow out}\\ \text{of element}\\ \text{of volume}\end{pmatrix} + \begin{pmatrix}\text{rate of reactant}\\ \text{loss due to}\\ \text{chemical reaction}\\ \text{within the element}\\ \text{of volume}\end{pmatrix} + \begin{pmatrix}\text{rate of}\\ \text{accumulation}\\ \text{of reactant}\\ \text{in element}\\ \text{of volume}\end{pmatrix}$$

Plug flow and therefore Plug flow reactor (PFR) is characterized by the fact that the flow of fluid through the reactor is orderly with no element of fluid overtaking or mixing with any other element ahead or behind, but there may be lateral mixing. For all elements of fluid the residence time is same in the PFR. The concentration of the fluid varies through the flow path .

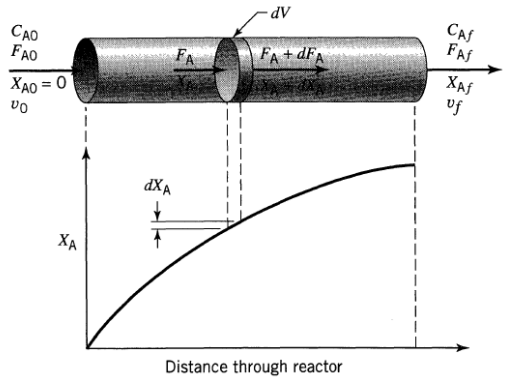

Figure 1. Notation for a plug flow reactor

Constant Flow Stirred Tank Reactor (CSTR) is perfectly mixed reactor in which all the variables are the same at each point inside the reactor so the temperature and concentration of the fluids inside and the exit stream are the same.

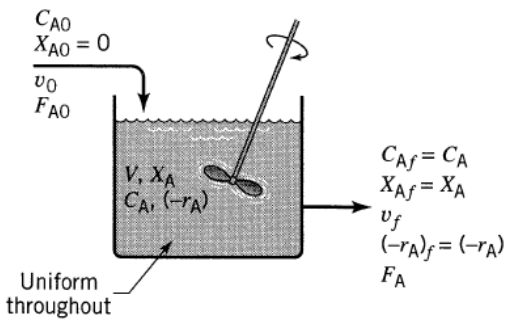

Figure 2. Notation for a mixed reactor

The performance equation can be expressed in terms of concentrations or conversions. These equations are related to the rate of reaction, the extent of reaction, the reactor volume and the feed rate. For the systems which the density changes, using conversion is more convenient.

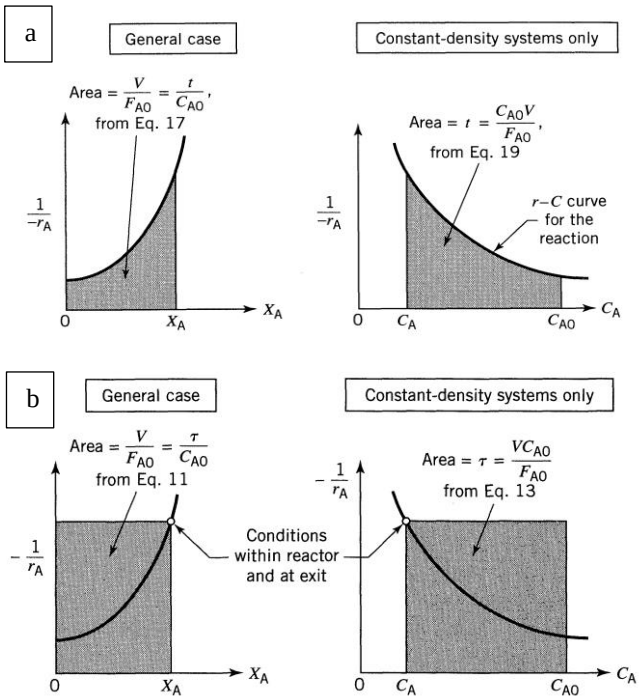

Figure 3. Graphical representation of the performance equations for a) plug flow reactors b) mixed flow reactor

Chemical reactions can be classified in different ways. The most general distinction depends on the type of phases as homogeneous and heterogeneous systems. The saponification of ethyl acetate by sodium hydroxide is an example for homogeneous reaction.

$$NaOH + CH_3COOC_2H_5 \rightarrow CH_3COONa + C_2H_5OH$$

Sodium Hydroxide + Ethyl Acetate → Sodium Acetate + Ethyl Alcohol

EXPERIMENTAL PROCEDURE

I. TUBULAR REACTOR

Experimental Setup

The reactor vessel (1) is set on a baseplate (14) which is designed to be located on the four studs of the service unit and then secured by thumbnuts. The positioning of the reactor on the service unit is illustrated. The reactor is positioned on the service unit with the non-return valve sited on the left and towards the rear.

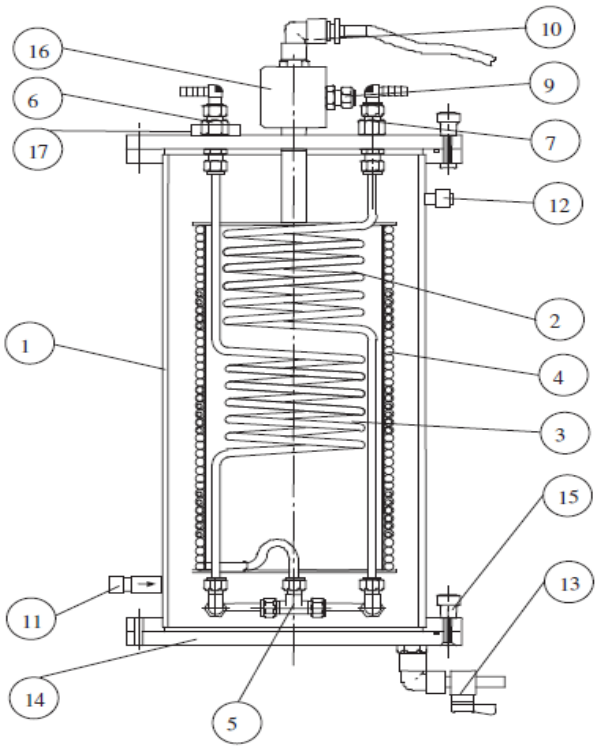

The tubular reactor in which the chemical reaction takes place is a flexible coil (4) wound around an acrylic former. Total volume of the reactor coil is 0.4 L. In order to maintain a constant temperature throughout the reactor coil, the coil bundle is submerged in circulating water which is automatically maintained at a pre-selected temperature by the temperature controller in the console. The actual temperature of the circulating water and therefore the reactants is relayed to the controller by a sensing probe which is held in gland (8) in the lid. Water enters from the circulator at the non-return valve (11) - this prevents water draining back through the priming vessel of the circulator when the pump is stopped. Water leaves the reactor at overflow (12) and returns to the circulator.

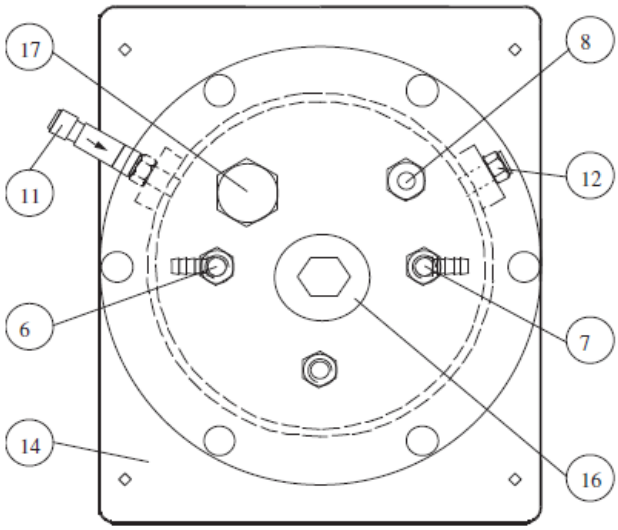

A filling plug (17) is provided on the top of the reactor vessel to allow the vessel to be filled with clean water. This plug (with sealing washer) must be fitted when the hot water circulator on the service unit is in operation. Sockets in the side of the console pod of the service unit are provided to connect the conductivity probe and temperature sensor to the instrumentation in the console. These are of a different size so that the probes cannot be wrongly connected. When not in use, the reactor can be drained using valve (13) in the base.

Reactants are pumped from the two feed tanks by the peristaltic pumps and enter the reactor through connectors (6) and (7) in the lid of the vessel. Each reactant is preheated by heat transfer coils (2) and (3) before being blended together in "T" fitting (5). The reactants pass up through the reactor coil and leave the reactor vessel through the conductivity probe housing (16). This housing allows the conductivity probe to be held in the stream of reactants emerging from the reactor. Flexible tubing from the hose nozzle (10) is used to guide the reactants to drain.

Experiment A: To determine the rate constant using a tubular reactor

The rate expression can be shown to be $r = k.a.b$

where if $a\mu$ is equal to $b\mu$ this simplifies to $r = k.a^2$

In the general case the order of reaction n is not known and is shown by $r = k.a^n$

The rate constant can be determined using the CET MkII Tubular Reactor.

For a second order reaction $kta_{\mu} = \frac{X_a}{1-X_a}$

A plot of $\frac{X_a}{1-X_a}$ against time t will give a straight line of slope ka_{μ}.

If the inlet concentration a_{μ} is known, k can be determined.

The reaction can be considered equi-molar and first order with respect to both sodium hydroxide and ethyl acetate i.e. second order overall

$$NaOH + CH_3COOC_2H_5 \rightarrow CH_3COONa + C_2H_5OH$$

Sodium Hydroxide + Ethyl Acetate → Sodium Acetate + Ethyl Alcohol

The reaction carried out in a Continuous Stirred Tank Reactor or Tubular Reactor eventually reaches steady state when a certain amount of conversion of the starting reagents has taken place. The steady state conditions will vary depending on concentration of reagents, flowrate, volume of reactor and temperature of reaction.

METHOD

- Make up 5.0 litre batches of 0.1M sodium hydroxide and 0.1M ethyl acetate.
- Remove the lids of the reagent vessels and carefully fill with the reagents to a level approximately 50mm from the top. Refit the lids.
- Adjust the set point of the temperature controller to 25°C.
- Ensure the conductivity probe and temperature sensor have been installed.
- Collection of data will be until a steady state condition is reached in the reactor and this takes approximately 30 minutes. It is advisable to set the data collection period to, say, 45 minutes.
- Set the pump speed controls to give 80 ml/min flowrate for each reactant ($F_a = F_b$ = 80ml/min = 1.33×10^{-3} dm^3/sec.)
- Prior to priming the hot water circulating pump, fill the reactor with cold water. To fill the vessel, it is necessary to pinch together the walls of the tubing connecting the overflow to the hot water circulator, either manually by bending and holding the tube or using a suitable clip (ensuring that any clip used will not cause damage to the tubing).

- Fill the vessel to a level above the overflow (return to the circulator), just below the reactor lid, using a suitable hose from a domestic supply through the temperature sensor gland (8) in the lid. A non-return valve (11) prevents water flowing out of the reactor via the inlet.
- Ensure the temperature sensor is re-fitted and the gland tightened securely by hand before releasing the outlet tubing.
- Switch on the hot water circulator. The temperature of the water in the reactor vessel will begin to rise and will be automatically maintained at the desired set-point (25°C in this instance).
- Switch on both feed pumps.
- Reactants will flow from both feed vessels and enter the reactor through the connections in the lid. Each reactant passes through pre-heat coils submerged in the water in which they are individually brought up to the reaction temperature. At the base of the tubular reactor coil, the reactants are mixed together in a "T" connection and begin to pass through the coil. The reacting solution will emerge from the coil through connector (16) in the lid where a probe senses continuously the conductivity which is related to degree of conversion.
- It has been determined that the degree of conversion of the reagents affects the conductivity of the reactor contents so that recording the conductivity with respect to time using the Armfield Data Logger can be used to calculate the amount of conversion.
- Record the conductivity manually at half minute intervals, by reading the value directly from the conductivity meter in the console.
- The experiment should be repeated at various other temperatures to investigate the relationship between the specific rate constant (k) and the temperature of reaction.

INTERPRETATION OF RESULTS

The conductivity measurements must be translated into degree of conversion of the constituents.

Both sodium hydroxide and sodium acetate contribute conductance to the reaction solution whilst ethyl acetate and ethyl alcohol do not. The conductivity of a sodium hydroxide solution at a given concentration and temperature however, is not the same as that of a sodium acetate

solution at the same molarity and temperature and a relationship has been established allowing conversion to be inferred from conductivity:

Calculate the values of a_o, b_o, c_∞, a_∞, $\Lambda_{c\infty}$, Λ_{ao}, $\Lambda_{a\infty}$, Λ_o and Λ_∞ from the following formula using the Nomenclature

$$a_o = \frac{F_a}{F_a + F_b} a_\mu$$

$$b_o = \frac{F_b}{F_a + F_b} b_\mu$$

$c_\infty = b_o$	for $b_o < a_o$
$c_\infty = a_o$	for $b_o \geq a_o$
$\Lambda_{c\infty} = 0.070[1 + 0.0284(T-294)]\, c_\infty$	for $T \geq 294$
$\Lambda_{ao} = 0.195[1 + 0.0184(T-294)]\, a_o$	for $T \geq 294$
$\Lambda_o = \Lambda_{ao}$	assumes $c_o = 0$
$a_\infty = 0$	for $a_o < b_o$
$a_\infty = (a_o - b_o)$	for $a_o \geq b_o$
$\Lambda_{a\infty} = 0.195[1 + 0.0184(T-294)]\, a_\infty$	if $a_\infty \neq 0$
$\Lambda_\infty = \Lambda_{c\infty} + \Lambda_{a\infty}$	

Calculate values of sodium hydroxide concentration (a_1) and sodium acetate concentration (c_1) and the degree of conversion (X_a) and (X_c) for each of the samples of conductivity taken over the period of the experiment.

These can be calculated and listed in columns alongside the readings of conductivity using the following equations:

$$a_1 = (a_\infty - a_o)\left[\frac{\Lambda_o - \Lambda_1}{\Lambda_o - \Lambda_\infty}\right] + a_o$$

$$c_1 = c_{\infty 1}\left[\frac{\Lambda_o - \Lambda_1}{\Lambda_o - \Lambda_\infty}\right] \qquad \text{for } c_o = 0$$

$$X_a = \frac{a_o - a_1}{a_o}$$

$$X_c = \frac{c_1}{c_\infty} \qquad \text{for } c_o = 0$$

To calculate the specific rate constant, k:

The overall mass balance at steady-state condition may be written as:

Input – Output ± Reaction = 0

i.e. for a reactant a in a reactor of volume V

$$\frac{d(Va_1)}{dt} = F.a_o - Fa_1 - V.k.a_1^2$$

For the continuous reactor operating at steady state the volume may be assumed constant and

$$k = \frac{F}{V}.\frac{a_o - a_1}{a_1^2} = \frac{(F_a + F_b)}{V}.\frac{(a_o - a_1)}{a_1^2} \text{ mol/dm}^3 \text{ sec}$$

The steady state concentration of NaOH in the reactor a_1 may be used to calculate the specific rate constant k.

Experiment B: To investigate the effect of throughput on conversion

For a tubular reactor, the mass balance for a reactant a is represented by

$$\int_{a_1}^{a_o} \frac{da}{r_a} = \frac{AL}{F}$$

For the reaction between ethyl acetate and sodium hydroxide, it is equi-molar and is second order in nature, thus

$$r = k.a.b$$

where k is the kinetic rate constant.

Arranging for initial concentrations of a and b to be equal $r = k.a^2$

$$\int_{a_1}^{a_o} \frac{da}{k.a^2} = \frac{AL}{F}$$

$\frac{AL}{F} = t_R$ the residence time

Integrating,

$$\frac{1}{a_o} - \frac{1}{a_1} = k.t_R$$

Fractional conversion,

$$X_a = \frac{a_o - a_1}{a_o}$$

Therefore,

$$k.t_R.a_o = \frac{X_a}{1-X_a}$$

Thus the conversion factor $\frac{X_a}{1-X_a}$ is directly proportional to t_R the residence time for constant reaction temperatures (T).

METHOD

- The experimental procedure is identical to that of Experiment A with the exception that flow rates of reactants can be varied to change the residence time of the reactants in the reactor.
- Calculate the degree of conversion of the reactants at steady state using conductivity readings for different values of F_a and F_b. Experiment A used flows of 80 ml/min so it is suggested that flows of 40 ml/min and 60 ml/min are used for this experiment.
- Plot tR against $\frac{X_a}{1-X_a}$.
- Comment on the graph obtained.

Experiment C: To demonstrate the temperature dependence of the reaction and the rate constant

The rate of reaction as characterised by its rate constant k is strongly temperature dependent. This is generally expressed as the Arrhenius equation:

$$k = \breve{A}\, e^{-\frac{E}{RT}}$$

where E (activation energy [J/mol]) and R (gas constant [J/mol.K]) are constants, T [K]

is the reaction temperature and Ă - frequency factor.

Therefore,

$$lnk = \ln \breve{A} - \frac{E}{RT}$$

A logarithmic plot of k vs. 1/T will give a straight line

METHOD

- The procedure will be identical to that of Experiment A with the exception that the reaction will be carried out at different reactor temperatures.
- Experiment A was carried out at 25°C. It is suggested that the reaction be carried out at a minimum of two further settings, 20°C and 30°C in order to plot the graph.
- Plot 1/T vs. ln k and comment on the graph obtained.

II. CONTINUOUS STIRRED TANK REACTOR

Experimental Setup

The reactor vessel is set on a baseplate which is designed to be located on the four studs of the service unit and then secured by thumbnuts. The reactor is supported by three pillars; position the reactor on the service unit such that a single pillar is to the front.

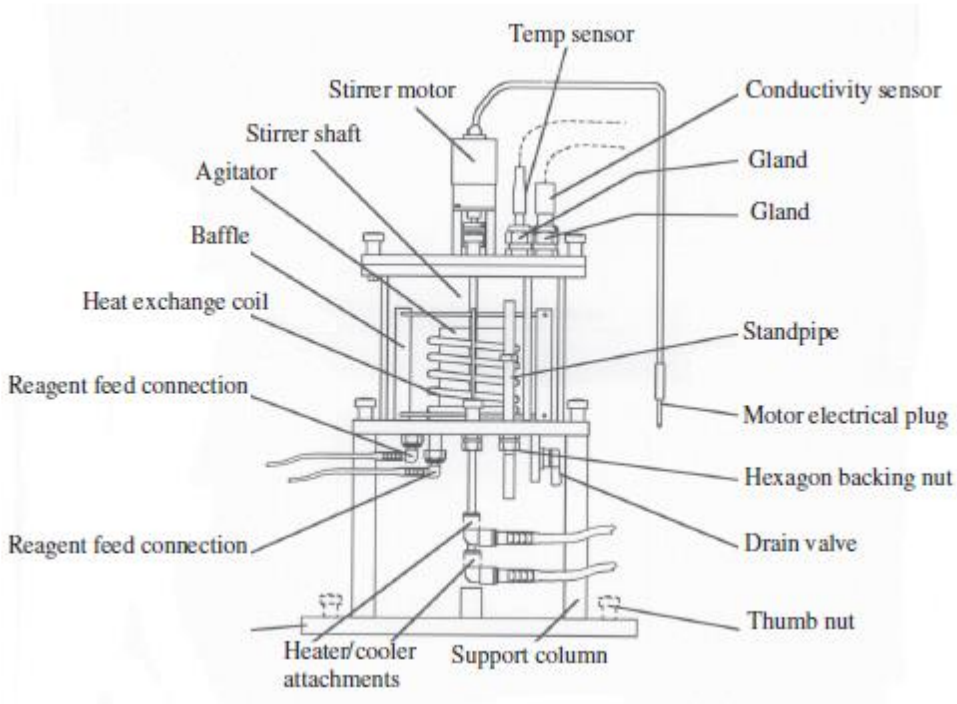

A stainless steel coil inside the reactor provides the heat transfer surface for either heating or coiling the chemical reactants. The coil is connected either to the hot water circulator or the chiller. The coil inlet is at the front of the reactor and the coil return is at the rear of the reactor.

A turbine agitator works in conjunction with a baffle arrangement to provide efficient mixing and heat transfer. The agitator is driven by an electric motor mounted on the lid of the reactor. The motor is driven by a variable speed unit mounted in the front of the service unit. The socket for the motor electrical plug is sited at the rear of the service unit.

Glands in the reactor lid house the conductivity and temperature sensors provided with the service unit. The larger of the two glands is for the conductivity probe. The glands are unscrewed by hand, the probes inserted completely into the reactor until they rest on the reactor base and then the glands re-tightened by hand. Sockets in the side of the console on the service unit are provided to connect each probe. These are of different size so that the probes cannot be wrongly connected.

Chemical reagents are pumped from the two feed tanks into the reactor separately through connectors in the base of the reactor. The two feed pumps of the service unit are connected to these. As reagents are pumped into the reactor, the level increases until it finally overflows the stand pipe and flows to drain. The stand pipe may be adjusted in height by loosening the hexagonal backing nut. A mark is etched onto the stand pipe. For maximum operating volume of the reactor, this mark should be aligned with the backing nut. A stop prevents the stand pipe from being completely removed, and this also defines the minimum working volume which is half the maximum volume.

When the reactor is not being used, it can be drained using the valve sited on the underside of the reactor.

Experiment A: To find the reaction rate constant in a Continuous Stirred Tank Reactor

$$NaOH + CH_3COOC_2H_5 \rightarrow CH_3COONa + C_2H_5OH$$

Sodium Hydroxide + Ethyl Acetate → Sodium Acetate + Ethyl Alcohol

The reaction can be considered equi-molar and first order with respect to both sodium hydroxide and ethyl acetate, i.e. second order overall, within the limits of concentration (0 - 0.1M) and temperature (20 - 40°C) studied.

The reaction carried out in a Continuous Stirred Tank Reactor eventually reaches steady state when a certain amount of conversion of the starting reagents has taken place.

The steady state conditions will vary depending on concentration of reagents, flowrate, volume of reactor and temperature of reaction.

METHOD

- Make up 5.0 litre batches of 0.1M sodium hydroxide and 0.1M ethyl acetate.
- Remove the lids of the reagent vessels and carefully fill with the reagents to a level approximately 50mm from the top. Refit the lids.
- Adjust the set point of the temperature controller to 30°C.
- Collection of conductivity data will be until a steady state condition is reached in the reactor and this takes approximately 30 minutes. It is advisable to set the data collection period to, say, 45 minutes.
- Using the calibration graph for each of the feed pumps, set the pump speed control to give 40 ml/min flowrate.
- Set the agitator speed controller to 7.0.
- Switch on both feed pumps and the agitator motor. After a few minutes the temperature sensor tip will be covered (about 25mm of liquid in reactor) – switch on the hot water circulator.
- It has been determined that the degree of conversion of the reagents affects the conductivity of the reactor contents so that recording the conductivity can be used to calculate the amount of conversion.
- The experiment should be repeated at various other temperatures to investigate the relationship between the specific rate constant (k) and the temperature of reaction.

INTERPRETATION OF RESULTS.

Having recorded the conductivity of the contents of the reactor over the period of the reaction, the conductivity measurements must now be translated into degree of conversion of the constituents.

Both sodium hydroxide and sodium acetate contribute conductance to the reaction solution whilst ethyl acetate and ethyl alcohol do not. The conductivity of a sodium hydroxide solution

at a given concentration and temperature, however, is not the same as that of a sodium acetate solution at the same molarity and temperature and a relationship has been established allowing conversion to be inferred from conductivity.

Calculate the values of a_o, b_o, c_∞, a_∞, $\Lambda_{c\infty}$, Λ_{ao}, $\Lambda_{a\infty}$, Λ_o and Λ_∞ from the following formula using the Nomenclature

$$a_o = \frac{F_a}{F_a + F_b} a_\mu$$

$$b_o = \frac{F_b}{F_a + F_b} b_\mu$$

$c_\infty = b_o$	for $b_o < a_o$
$c_\infty = a_o$	for $b_o \geq a_o$
$\Lambda_{c\infty} = 0.070[1+ 0.0284(T-294)]\ c_\infty$	for $T \geq 294$
$\Lambda_{ao} = 0.195[1+ 0.0184(T-294)]\ a_o$	for $T \geq 294$
$\Lambda_o = \Lambda_{ao}$	assumes $c_o = 0$
$a_\infty = 0$	for $a_o < b_o$
$a_\infty = (a_o - b_o)$	for $a_o \geq b_o$
$\Lambda_{a\infty} = 0.195[1+ 0.0184(T-294)]\ a_\infty$	if $a_\infty \neq 0$
$\Lambda_\infty = \Lambda_{c\infty} + \Lambda_{a\infty}$	

For the values of each of the above, calculate values of sodium hydroxide concentration (a_1) and sodium acetate concentration (c_1) and the degree of conversion (X_a) and (X_c) for each of the samples of conductivity taken over the period of the experiment

These can be calculated and listed in columns alongside the readings of conductivity using the following equations:

$$a_1 = (a_\infty - a_o)\left[\frac{\Lambda_o - \Lambda_1}{\Lambda_o - \Lambda_\infty}\right] + a_o$$

$$c_1 = c_\infty \left[\frac{\Lambda_o - \Lambda_1}{\Lambda_o - \Lambda_\infty}\right] \qquad \text{for } c_o = 0$$

$$X_a = \frac{a_o - a_1}{a_o}$$

$X_c = \frac{c_1}{c_\infty}$ for $c_o = 0$

To calculate the specific rate constant, k:

The overall mass balance at steady-state condition may be written as:

Input – Output ± Reaction = 0

i.e. for a reactant a in a reactor of volume V

$$\frac{d(Va_1)}{dt} = F.a_o - Fa_1 - V.k.a_1^2$$

For the continuous reactor operating at steady state the volume may be assumed constant and

$$k = \frac{F}{V}.\frac{a_o - a_1}{a_1^2} = \frac{(F_a + F_b)}{V}.\frac{(a_o - a_1)}{a_1^2} \text{ mol/dm}^3 \text{ sec}$$

The steady state concentration of NaOH in the reactor (a_1) may be used to calculate the specific rate constant k.

Experiment B: To determine the effect of inadequate mixing on the reaction rate

The rate of reaction is measured by the amount of reactants converted to products in a unit of time. In order for reaction to occur, particles must come into contact and this contact must result in interaction. The rate of reaction depends on the collision frequency and collision efficiency of particles of the reacting substances. These factors are optimised by thorough mixing of the reactants using stirrers and baffles within the reactor. Inefficient mixing will result in reduced reaction rates.

Considering the reaction between sodium hydroxide and ethyl acetate, if the initial concentrations are equal (both a_0) and the conversion (X_a) then the concentrations are as follows:

$$NaOH + CH_3COOC_2H_5 \rightarrow CH_3COONa + C_2H_5OH$$

$(a_o\text{-}X_a)$ $(a_o\text{-}X_a)$ (X_a) (X_a)

METHOD

Repeat Experiment A after removing the baffles from the reactor. This is achieved by removing the conductivity and temperature probes then removing the lid of the reactor. The baffle arrangement simply lifts out.

Repeat the experiment with baffles removed and no stirring action.

Three sets of data will be obtained:

a. Stirred reactor with baffle (see Experiment A)

b. Stirred reactor, no baffle

c. Un-stirred reactor, no baffle

Graphs of the reaction conversion with time can be plotted.

Comment on the results obtained. How did removal of the baffle affect the reaction rate? What effect does stirring have on the reaction rate?

Experiment C: Dynamic behaviour of continuous stirred tank reactors

Effect of a step input change, calculation of the average residence time.

If C = concentration in tank at time t after input step change

C_0 = concentration of the input

Then $C = C_o\left(1 - e^{\frac{t}{t_c}}\right)$ where t_c: time constant

And $\frac{dC}{dt} = \frac{C_o e^{\frac{t}{t_c}}}{t_c}$

$= \frac{C_o}{t_c}$ at t=0

Hence t_c may be found graphically

METHOD

Make up 5.0 litres of a solution of 0.1M sodium hydroxide and fill one of the feed vessels to approximately 50.0mm from the top of the vessel. Fill the other feed vessel with demineralised water.

Start the reactor stirrer and set to a speed of '7.0' on the speed adjust dial. The experiment can be carried out at room temperature initially. If other reactor temperatures are required this is achieved using the hot water circulator and the temperature controller in the console as detailed in previous experiments.

Start the sodium hydroxide feed pump and set the speed control to maximum in order to fill the reactor to the overflow as quickly as possible. When the reactor is full, slow the feed pump to give a flow rate of 20.0 ml/min.

At this point start taking readings of conductivity at regular intervals.

Start the water feed pump and set to 50.0 ml/min.

The conductivity of the reactor contents will begin to reduce and, after a period of approximately 1 hour, will approach the conductivity of the feed solution.

The final concentration in the reactor will be:

$$c_\infty = \frac{20}{70} 0.05 = 0.014\ M$$

Calculate $\ln\frac{C_\infty - C_1}{C_\infty - C_O}$ where C_1 is the concentration at time t, and C_o is the concentration of NaAc at the start, for readings of t throughout the experiment. Plot this value against t and calculate the slope (straight line graph passing through the origin). The slope is the average residence time t_R which should be equal to V/F where V is the reactor volüme and F is the total flow rate into the reactor.

DISCUSSIONS

Compare the specific rate constant k both from the graph of $\frac{X_a}{1-X_a}$ against time t and calculated from the formula.

Discuss the effect of temperature on the reaction rate and reaction rate constant.

Discuss the effect of flow rate on the degree of conversion of the reactants.

NOMENCLATURE

A	cross sectional area of tubular reactor	(cm^2)
a_μ	sodium hydroxide conc. in feed vessel	(mol/dm^3)
a_o	sodium hydroxide conc. in mixed feed	(mol/dm^3)
a_1	sodium hydroxide conc. in reactor at time t	(mol/dm^3)
a_∞	sodium hydroxide conc. in reactor after ∞ time	(mol/dm^3)
b	ethyl acetate conc.	(mol/dm^3)
(same subscripts as above for a)		
c	sodium acetate conc.	(mol/dm^3)
(same subscripts as above for a)		
F	total volume feed rate	(dm^3/s)
F_a	volumetric feed rate of sodium hydroxide	(dm^3/s)
F_b	volumetric feed rate of ethyl acetate	(dm^3/s)
k	specific rate constant	
L	overall length of tubular reactor	(cm)
r	reaction rate	
t_R	residence time	(s)
t	elapsed time	(s)
T	reactor temperature	(K)
V	volume of reactor	(dm^3)
X_a	conversion of sodium hydroxide = $\frac{a_o - a_1}{a_o}$	
Xc	conversion to sodium acetate =$\frac{c_1 - c_o}{c_\infty}$	
Λ	conductivity	(Siemens/cm)
Λ_o	initial conductivity	
Λ_1	conductivity at time t	
Λ_∞	conductivity after ∞ time	
Λ_a	sodium hydroxide conductivity	
Λ_c	sodium acetate conductivity	
Ă	Arrhenius frequency factor	
E	activation energy	(J/mol)
R	gas constant	(J/mol K)
C	concentration in tank at time t after input step change	
C_0	concentration of the input	
t_c	time constant	

REFERENCES

1. FOGLER H.S. (1992). Elements of Chemical Reaction Engineering. (4th ed.), Prentice Hall Professional PTR International Series,
2. LEVENSPIEL O. (1999). Chemical Reaction Engineering. (3th ed.). John Wiley & Sons Inc., United States of America.
3. Tubular Reactor Instruction Manual, Armfield Limited, ISSUE 16, January 2006.
4. Continuous Stirred Tank Reactor Instruction Manual, Armfield Limited, Issue 14, January 2006