EXPERIMENT 2: GAS ABSORPTION

OBJECTIVES

The objectives of this experiment are;

- to determine the air pressure differential across the dry column as a function of the airflow rate,
- to examine the air pressure differential across the column as a function of airflow rate for different water flow rates down the column,
- to calculate the rate of absorption of carbon dioxide into the water from analysis of liquid solutions flowing down absorption column,
- to measure the absorption of carbon dioxide into water flowing down the tower, using gas analysis equipment provided,
- to determine the overall mass transfer coefficient.

THEORY

Gas absorption is an operation in which a gas mixture is contacted with a liquid to dissolve one or more components of the gas preferentially and to provide a solution of them in the liquid. This gas mixture usually consists of inert gas and the gas to be absorbed. Absorption complies with diffusion laws to obtain information about its general mechanism, and it is necessary to examine the situation in terms of gas-liquid equilibrium and absorption rate.

The reverse of the absorption process, removing a component dissolved in the liquid phase by passing an inert gas through this liquid, is the *desorption process*. For example, NH_3 is removed from an aqueous solution by passing air through this solution. The solubility of gases in liquids increases with increasing pressure and decreases with increasing temperature (Caisson disease: Air dissolution in the human body at high pressure in the sea).

Absorption can take the form of physical absorption, in which the component in the gas mixture dissolves in the liquid, or chemical absorption, where the component in the gas mixture reacts with the liquid.

Different gases have different solubilities in the same liquid at the same temperature and pressure. In other words, the absorption varies depending on the type of gas. The fact that vapors can quickly liquefy and the chemical reaction of some gases and vapors with the solvent liquid leads to an

increase in solubility. The solubility of a gas in a liquid at low concentrations follows Henry's Law. This situation can be understood from the fact that the xi-pi graph drawn according to the equation $xi = pi / p^o * Ki$ gives a line in each pressure range.

The solubilities of the same gas in different liquids at the same temperature and pressure are also different. In other words, the absorption also depends on the type of solvent. Acidic or basic mixtures are also used as absorbents instead of pure liquid. Basic gases such as ammonia in acidic solutions; acidic gases such as hydrogen chloride and carbon dioxide are fully absorbed in basic solutions in the presence of a chemical reaction.

The ideal solubilities of the components that are in an ideal gas mixture or vapor, in a liquid are independent of each other and depend only on their partial pressure. Therefore, the calculation can be made by applying Henry's law to each component independently. Based on the absorption differences in liquids, mixed gases can be separated from each other. While the absorption of a gas in a liquid is generally reduced with a continually rising temperature, its desorption generally increases.

The packing materials, or fill, used in the packed towers should have the following properties:

1. Provide for large interfacial surface between liquid and gas. The surface of the packing per unit volume of packed space should be large but not a microscopic sense. The specific packing surface, in any event, is almost more larger than the interfacial liquid-gas surface.
2. Possess desirable fluid-flow characteristics. It ordinarily means that the fractional void volume or fraction of empty space should be large in the packed bed. The packing must permit to flow of large volumes of fluid through small tower cross-sections without loading or flooding and with a low-pressure drop for the gas. Furthermore, the gas-pressure drop should be largely the result of skin friction, if possible, since there is more effective than form drag in promoting high values of the mass transfer coefficients.
3. Be chemically inert to fluids being processed.
4. Have structural strength to permit easy handling and installation.
5. Represent low cost.

Packings are two major types, random and regular. Random packings are dumped into the tower during installation and allowed to fall at random. *Raschig rings* are the most used filling materials. It consists of cylindrical rings whose height is equal to its diameter, and the thickness of the walls varies depending on the type of material they are made of. They can be made of ceramic or metal.

They are the best tower fill materials in terms of unit volume weight, free volume, free cross-sectional area, and surface unit volume. *Berl saddles* are saddle-shaped materials made of porcelain and filled randomly in the towers. Their superiority over others offers low frictional resistance to gas flow and has a sufficient gas-liquid contact surface.

Spiral rings: These rings with a volute chamber inside are entirely similar to Raschig rings; the volute chamber covers the ring section entirely or partially. These rings are always lined up in orderly rows and are never filled randomly into the tower. The volute chamber increases the gas-liquid contact significantly but does not reduce the free cross-sectional area and accessible volume. However, both their prices and placement fees are relatively high.

Mass Balances

At a steady state, the transfer of absorbing gas from the gas stream should equal that transferred to the liquid (Figure 1).

Li and Lo: the volume flow of liquid entering and leaving the column, respectively.

Gi and Go: the total gas molal flow entering and leaving the column, respectively.

y_i and y_o : the mole fraction of CO_2 entering and leaving the column in the gas stream.

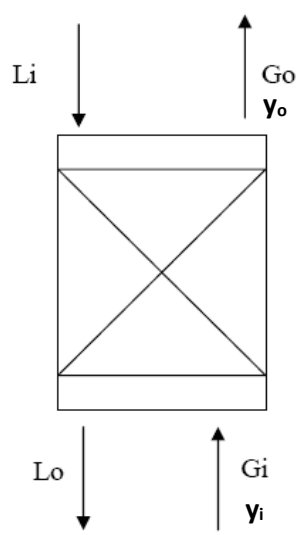

Figure 1. Material balance diagram for the packed column.

Amount of CO_2 removed from the gas stream: Gi – Go (gmol/s)

as no air dissolved in the solution.

The amount of CO_2 removed from the liquid stream equals LoC_{No}-$Li\ C_{Ni}$ (gmol/s)

In this system, while the liquid flows in and out are the same in this experiment (Lo = Li), the gas flows are not equal because of the removal of CO_2 and the pressure drop across the column. Go can be calculated from a molar balance on the air stream, none of which is absorbed:

$Go\ (1 - y_o) = Gi\ (1 - y_i)$

The equation given for packed adsorption columns can be used to determine the overall mass transfer coefficient (K_{OG}) for the gas phase.

y * and y: the mole fraction of gas in equilibrium with the liquid at any point in the column and mole fraction of bulk phase,

A: the cross-sectional area of the tower

H: the packing height

a: the specific area of packing/unit volume of packing

For dilute gases in an otherwise gas stream, the equation can be simplified:

$$H = \frac{d[Gy]}{K_{OG}aA(y^* - y)}$$

$$K_{OG} = \frac{Gdy}{HaA(y^* - y)}$$

Since it is challenging to integrate the term on the right side of the equation, K_{OG} can be determined more simply but with less precision from the following equation;

$$N = K_{OG}aAH\frac{(Pi - Po)}{\ln\left(\frac{Pi}{Po}\right)}$$

where N: rate of absorption (gmol / second). When this equation is rearranged,

$$K_{OG} = \frac{N\ln\left(\frac{Pi}{Po}\right)}{aAH(Pi - Po)}$$

is obtained.

EXPERIMENTAL SETUP

The Armfield UOP7 Gas Absorption Column apparatus shown in Figure 2 is made up of two 75 mm diameter clear acrylic sections joined end to end. The column is filled with 9mm x 9mm glass Rasching ring. Pressure tappings at the base, center, and top of the column are provided to determine pressure drop across the column using manometers. Sampling points are also provided for the gas at the same three points. The liquid outlet stream and feed solution are also equipped with the sampling points. Water is taken from a sump tank and pumped to the top of the column via a calibrated flowmeter. Gas is taken from a pressure cylinder through a calibrated flowmeter and mixed with air supplied and monitored from a small compressor in a predetermined mixed ratio. The gas mixture entering at the base of the column rises up through the packed bed and is counter-currently contact with the liquid flowing down the column. The effluent gas leaves the top of the column and is intended to be exhausted to the atmosphere.

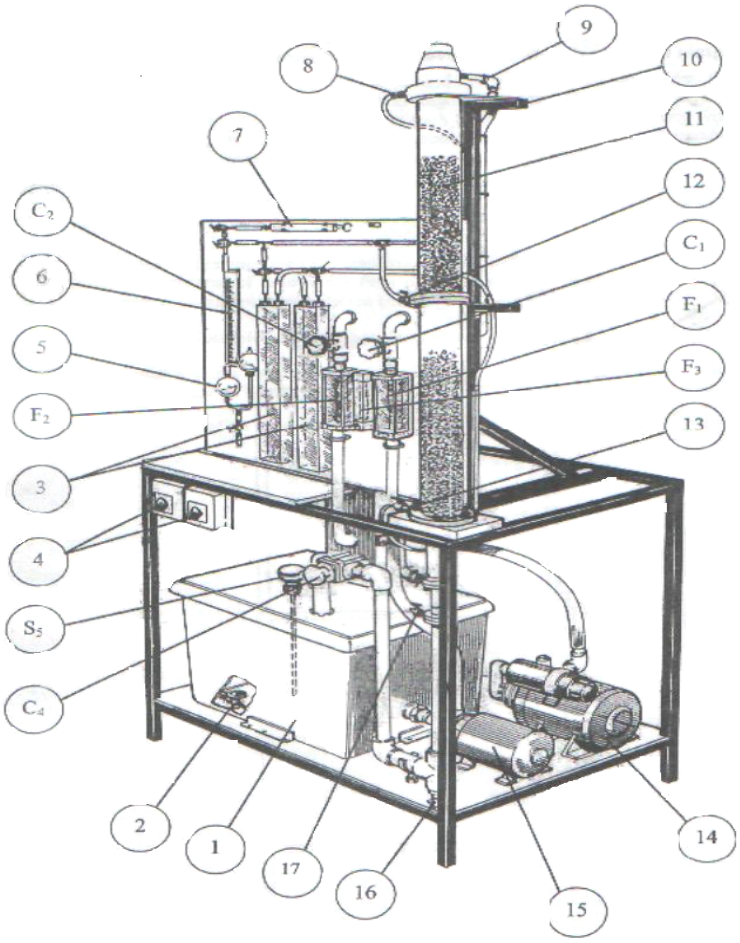

Figure 2. UOP7 Gas absorption column

EXPERIMENTAL PROCEDURE

- Fill sump tank with 20 liters deionized water.
- Be sure that the unit is connected to the electrical supply.

Experiment A: Determination of pressure drop when only gas flows in a packed column

By keeping the liquid pump off, pressure drops at different airflow rates (20, 40, 60, 80, 100, 120, 140, 160 L/min) are measured and recorded for dry packing materials.

Experiment B: Determination of pressure drop when gas and liquid flow in a packed column

Pressure drops are measured and recorded by increasing the gas flow rate for different liquid flows.

Air flowrate (L/min) / Water flowrate (L/min)	20	40	60	80	100	120	140	160
1								
3								
5								
7								

Experiment C: Investigation of the absorption of CO_2 into the water in a packed column-Analysis of liquid solutions

- With gas flow control valves C_2 and C_3 closed, start the liquid pump and adjust the water flow through the column to 6 L/min on flowmeter F_1 by adjusting flow control valve C_1.
- Start the compressor and adjust control valve C_2 to give airflow to 20 L/min on flowmeter F_2.
- Carefully open the pressure regulating valve on the carbon dioxide cylinder, and adjust valve C3 to value 5 L/min on the flowmeter F3.

- After 5 minutes of steady operation, take samples at a 15-minute interval from S_4 and S_5. Take 100 mL samples at known times in each case.
- Analyze the samples according to the procedure detailed below:

Transfer 50 ml of samples from the sump tank and exit of the column in two separate flasks, add 3-5 drops of phenolphthalein indicator (colorless) to the flask, and titrate with 0.0277 M NaOH solution until persistent pink color obtained. Record the volume used (V_B) for titration.

Experiment D: Determining the amount of CO_2 absorbed using gas analysis equipment

First, fill the two globes of the absorption analysis equipment on the panel's left with 1 M NaOH. Adjust the globes' level to the "0" mark on the slight tube, using drain valve C into a flask to do this. Take samples from the inlet and exit of the column. Analyze the inlet and outlet CO_2 content in gas mixture by using Hempl apparatus as shown in Figure 3.

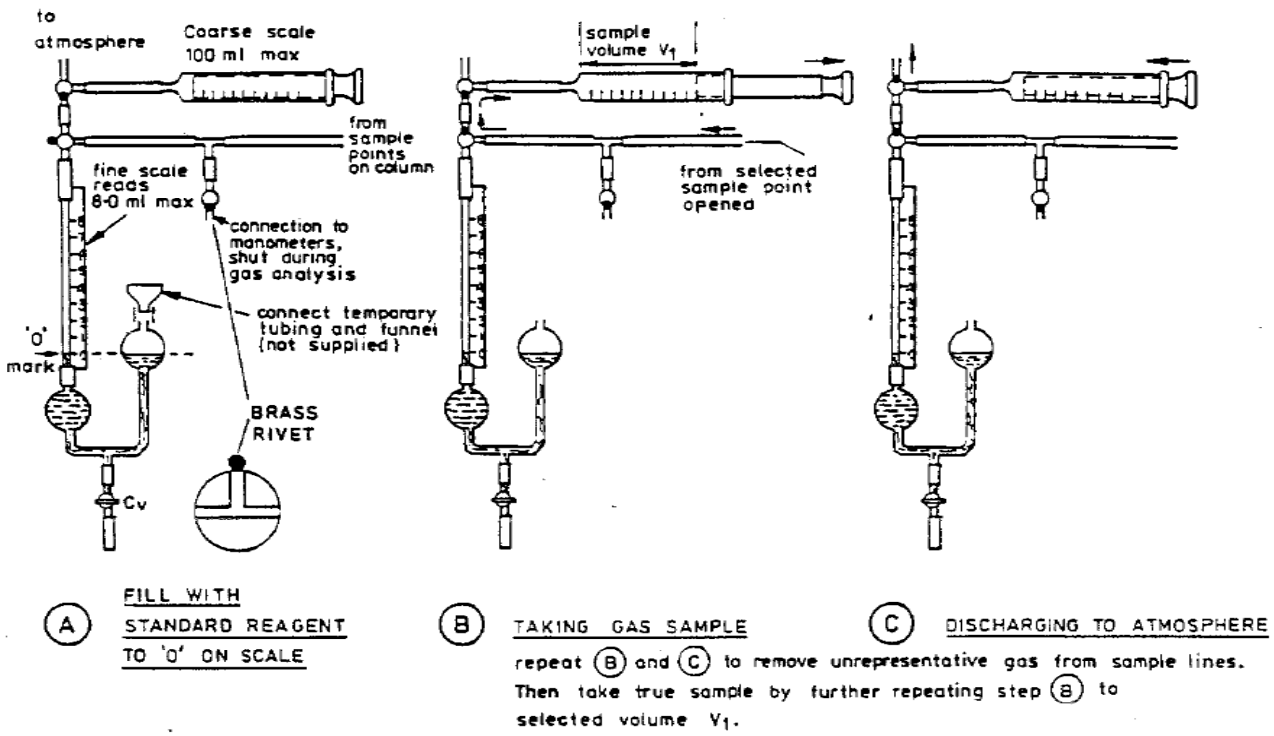

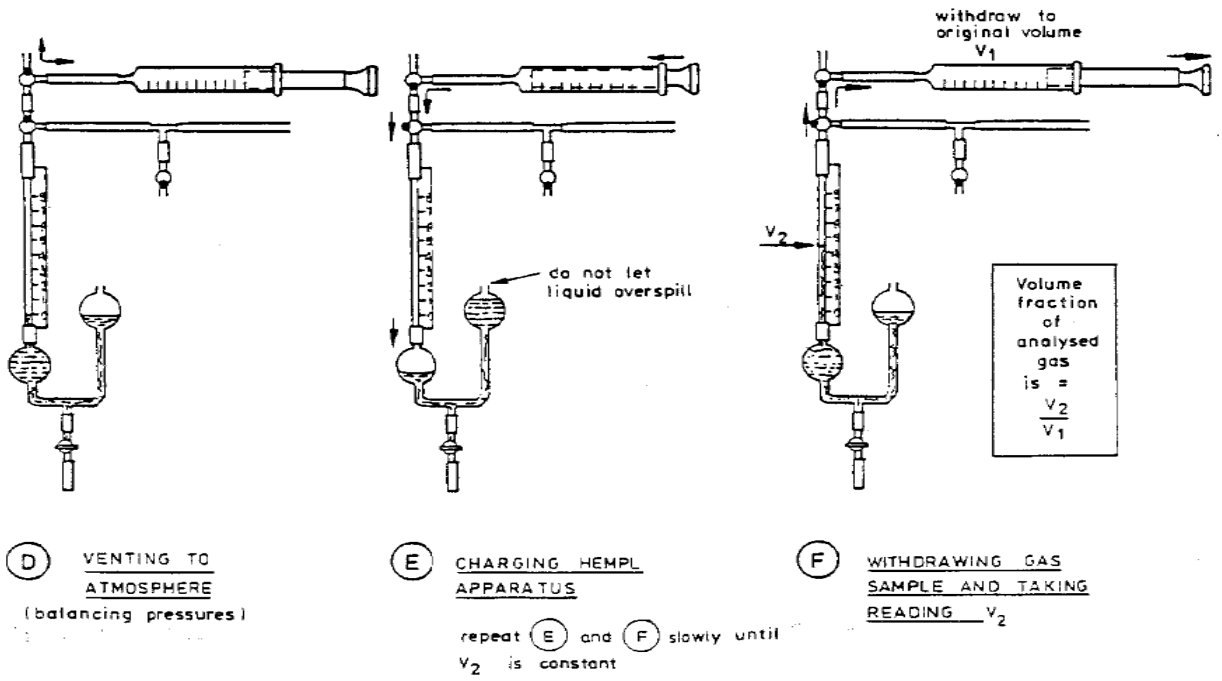

Figure 3. Determining the amount of CO_2 in the gas flow with the Hempl Apparatus

RESULTS AND CALCULATIONS

Experiment A: Determination of pressure drop when only gas flows in a packed column

Plot the pressure drop as a function of the airflow rate.

Experiment B: Determination of pressure drop when gas and liquid flow in a packed column

Plot the pressure drops as a function of the airflow rate for each water flow rate on the same graph.

Experiment C: Investigation of the absorption of CO_2 into the water in a packed column-Analysis of liquid solutions

Fill in the table below and make the calculations shown.

- The amount of CO_2 in the water sample:

$$C_d\left(\frac{gmol}{L}\right) = \frac{V_B * 0.0277}{V_A}$$

V_A : samples volume

V_B: volume of NaOH solution added

F_1=……L/s

V_T=……volume of water in the system (L).

Time (min)	From sump tank S_5 (Correspond to conditions at the top of the tower)		From liquid outlet sample point S_4	
	$V_{B\ (ml)}$	C_{di} (gmol / L)	$V_{B\ (ml)}$	C_{do}(gmol / L)
0				
15				
30				
45				
60				

- CO_2 absorbed over a time period (e.g., 30 minutes)

$$\text{Average rate (gmol/s)} = \frac{[C_{di}(t=45) - C_{di}(t=15)]}{30 * 60} * V_T$$

- CO_2 absorbed across the column at any particular time

Inlet flow of dissolved CO_2 (gmol/s) = $F_1\ C_{di}$

Outlet flow of dissolved CO_2 (gmol/s) = $F_1\ C_{do}$

Absorption rate (gmol/s) = $F_1\ [C_{di} - C_{do}]$

Experiment D: Determining the amount of CO_2 absorbed using gas analysis equipment

Fill in the table below and make the calculations.

ΔP=……pressure drop in packed column (mm Hg)

Readings at inlet and outlet conditions				Calculations		
F_3 (CO_2) L/s	F_2 (air) L/s	V_1 (initial syringe volume) ml	V_2 (volume read from Hempl apparatus) ml	$\frac{F_3}{F_2+F_3}$	$Y_i = (\frac{V_2}{V_1})_i$	$Y_o = (\frac{V_2}{V_1})_o$

Y = mole fraction = volume fraction (according to the ideal gas equation)

The volume fraction of CO_2 in the gas stream at the inlet; $Y_i = (\frac{V_2}{V_1})_i$

The volume fraction of CO_2 in the gas stream at the outlet; $Y_0 = (\frac{V_2}{V_1})_0$

F_a; The amount of CO_2 absorbed (L/s)

$$\underbrace{F_a}_{CO_2\text{ absorbed}} = \underbrace{[F_2+F_3]Y_i}_{CO_2\text{ in}} - \underbrace{[F_2+(F_3-F_a)]Y_0}_{CO_2\text{ out}}$$

$$F_a = \frac{(Y_i - Y_0)(F_2+F_3)}{1-Y_0}$$

The amount of CO_2 absorbed can be calculated as follows:

$$G_a\left(\frac{gmol}{s}\right) = \frac{F_a}{22.42} \times \left(\frac{av.column\ pressure\ mm\ Hg}{760}\right) \times \left(\frac{273}{av.column\ temp + 273}\right)$$

Experiment E: Determination of Overall Mass Transfer Coefficient

The data in the equation shown below is found, and the total transfer coefficient is calculated.

$$K_{OG} = \frac{N \ln\left(\frac{Pi}{Po}\right)}{aAH(Pi - Po)}$$

N: rate of absorption (gmol/s)

a: specific packing/unit volume of the tower, which for 9 mm Rasching rings is 440 m^2/m^3.

AH: volume of the column$=\frac{\pi}{4} \times (0.075)^2 \times 1.4 = 0.0062\ m^3$

Pi: partial pressure of CO_2 at the inlet (=total pressure x mole fraction)

Po: partial pressure of CO_2 at the outlet (=total pressure x mole fraction)

DISCUSSIONS

Experiment A: Determination of pressure drop when only gas flows in a packed column

- What is the slope value obtained from this graph? Explain what this value means.

Experiment B: Determination of pressure drop when gas and liquid flow in a packed column

- Explain how the changes occur with the increase of fluid flows in the graph obtained.
- Explain how there are changes in pressure drops at high flow rates.
- Identify the points where these changes occur. Explain what the features of these points are.

Experiment C: Investigation of the absorption of CO_2 into the water in a packed column-Analysis of liquid solutions

- Considering the absorption rate you have achieved, explain whether this absorption tower is sufficient to remove CO_2 from the air or why you need to change which parameters to increase the absorption rate.
- Explain what the last data you would get if the time for absorption was extended.

Experiment D: Determining the amount of CO_2 absorbed using gas analysis equipment

- Is the calculated gas absorption rate constant? Explain why you calculated one absorption rate.

Experiment E: Determination of Overall Mass Transfer Coefficient

- What is the overall mass transfer coefficient, and what does it indicate? Compare your overall mass transfer coefficient with the literature value.
- Calculate the tower height in this system with the data you have obtained and compare it with the actual tower height.

REFERENCES

Armfield Limited Engineering Teaching and Research Equipment Instruction Manual, Gas Absorption Column Apparatus, 1993.

Çataltaş, İ., Introduction to Chemical Engineering, İnkılap Kitabevi, İstanbul, 1986.

Faust, A. S, et al., Principles of Unit Operations, John Wiley, NY, 1981.

Geankoplis J. C., Transport Processes and Unit Operations, Prentice-Hall Inc., New Jersey, USA 1993.

McCabe L.W., Smith C. J., Harriot P., Unit Operations of Chemical Engineering, McGraw-Hill, New York, 2001.

Perry, H. R., and D., Green, Chemical Engineering's Handbook, 6th Ed., Mc Graw Hill, NY, 1984.

Treybal, R. E, Mass Transfer Operations, Mc Graw Hill, Singapore, 1981.

Docile, B., Mass Transfer Principles and Applications, G. Ü. İ. F. Yayınevi, Ankara, 1996.