EXPERIMENT 3

DISTILLATION COLUMN

Purpose of the experiment

Determining the pressure drop across the column for different boiling rates in batch distillation, determining the entire column yield for different boiling rates in batch distillation, performing batch distillation by changing the top and bottom product compositions at constant reflux rate over time.

General Overview

Distillation has always been and will continue to be one of the most important industrial processes for separating the different components of a liquid mixture.

Laboratory scale distillation columns are needed to provide adequate practical training for student engineers and plant operators in a safe environment. They may also be used to acquire process separation data, of use in full-scale plant design.

Distillation is a separation process that makes use of the different relative volatilities (vapor pressures) of the components that comprise a mixture. The main condition for the separation of the components is that the composition of the vapor is different from the composition of the liquid at equilibrium at its boiling point. Distillation is used to separate mixtures in which all components are volatile, for example ammonia-water or ethanol-water systems. In this experiment, a liquid mixture of 25 mole % methanol and 75 mole% water will be used.

Batch distillation is a preferred process for separating compounds whose volatility is sufficiently different, especially in small capacity operations. As can be seen in Figure 1, in a heated boiler, there is a liquid mixture of n_0 moles (A + B). When this liquid mixture reaches its boiling point, the resulting vapor will be richer in terms of the more volatile component "A". The composition of "A" in the product obtained by cooling and condensing this vapor is higher than the "A" concentration in the liquid in the boiler. At the end, an upper product rich in "A" is obtained and a liquid rich in "B" is finally left in the boiler.

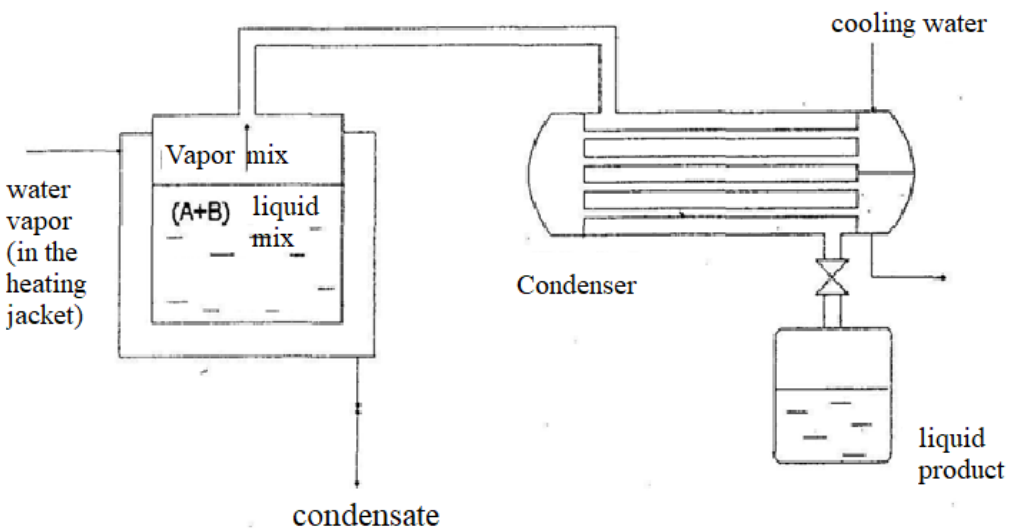

Figure 1. Batch distillation

Distillation Column is a self-contained distillation facility consisting of two interconnected units: a floor standing process unit and a bench-mounted control console.

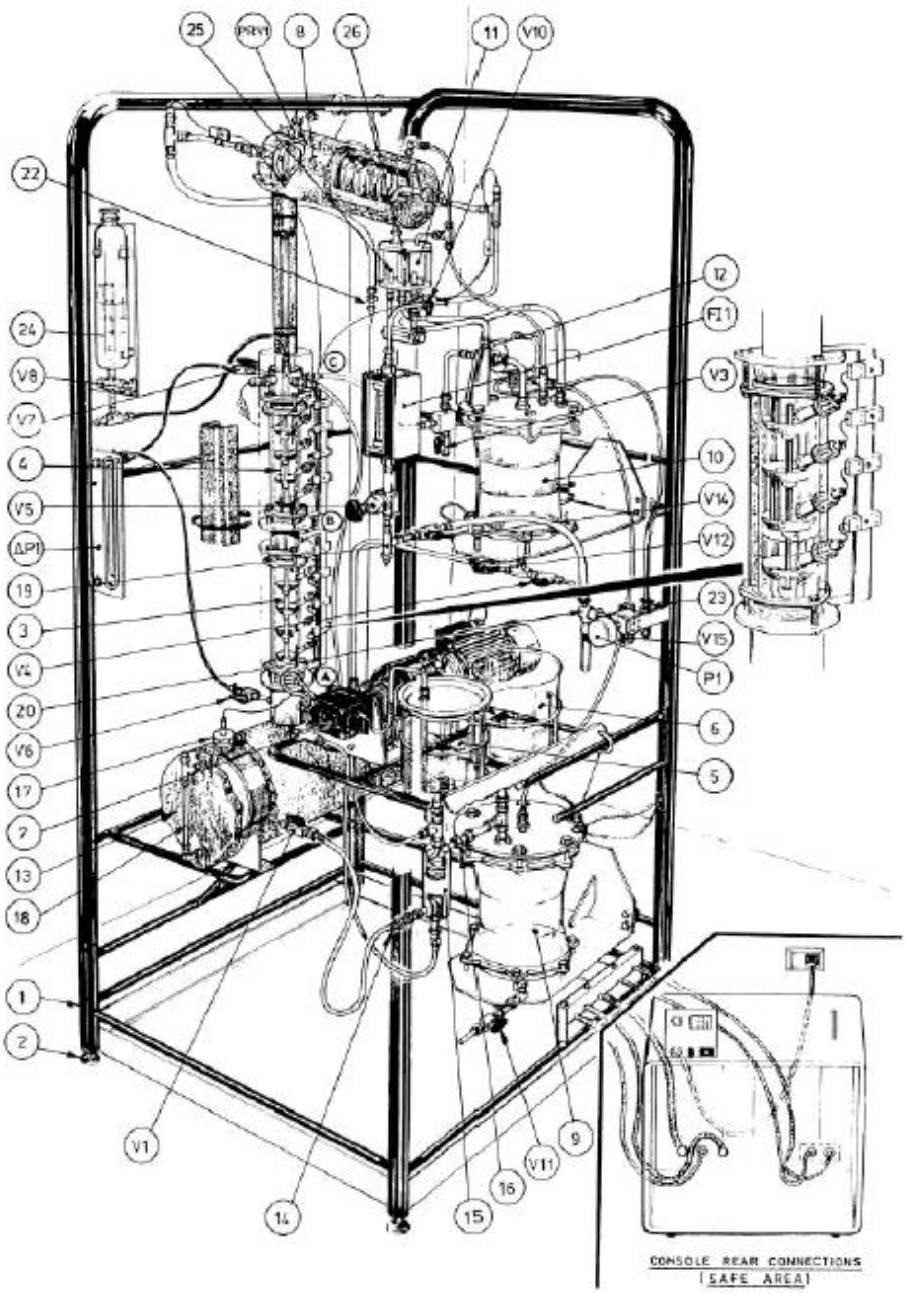

Figure 2. The process unit

Floor-Standing Frame

The distillation column is mounted on a floor standing, welded tubular steel framework (1) fitted with four adjustable feet (2). The frame is designed to allow the use of a fork lift or pallet truck to manoeuvre the unit into position initially.

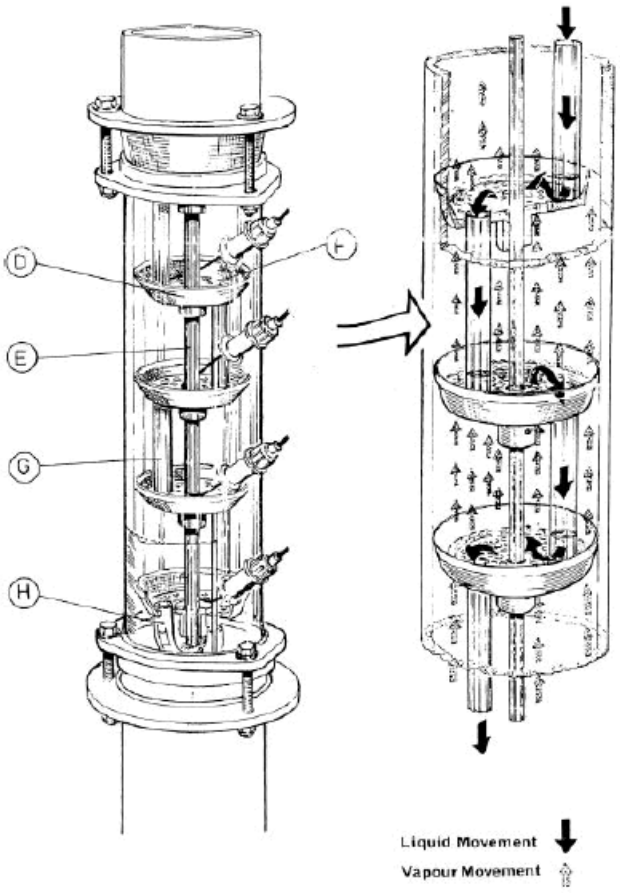

Figure 3. The distillation column

Distillation Column

The 50 mm diameter sieve plate column is made up of two glass sections (3) and (4) each containing four sieve plates. The columns are separated by a central feed section and arranged vertically for counter-current vapour/liquid flow. The column is insulated to minimise heat loss.

The glass column incorporates a total of eight sieve plates in two sections (3) and (4) each containing four plates. Each plate (D) is located by a central support rod (E) and incorporates a weir (F) and downcomer (G) to create a liquid seal between successive stages. The liquid seal on the final plate in each section is achieved by U-tube (H).

Reboiler

The reboiler (13) situated at the base of the column is manufactured from 316 stainless steel and incorporates a flameproof immersion type heating element. Either batch or continuous distillation can be carried out using this reboiler.

In continuous operation, valve (V1) is open and bottom product flows from the reboiler through the bottom product cooler (15) to the bottom product tank (9). It is possible to preheat the feed to the column by directing the feed through a spiral coil in the bottom product cooler where heat is transferred from product leaving the reboiler at the boiling point. When feeding cold feed directly to the column, the product from the reboiler is cooled in the bottom product cooler by circulating cold water through the spiral coil.

For batch operation, valve (V1) remains closed so that the reboiler can be filled with the initial charge (10 to 12 litres) of binary mixture.

The column and reboiler are both insulated to minimise heat loss. A level sensor (17) inside the reboiler protects the heating element from overheating due to low operating level and a sight glass (18) allows the level in the reboiler to be observed.

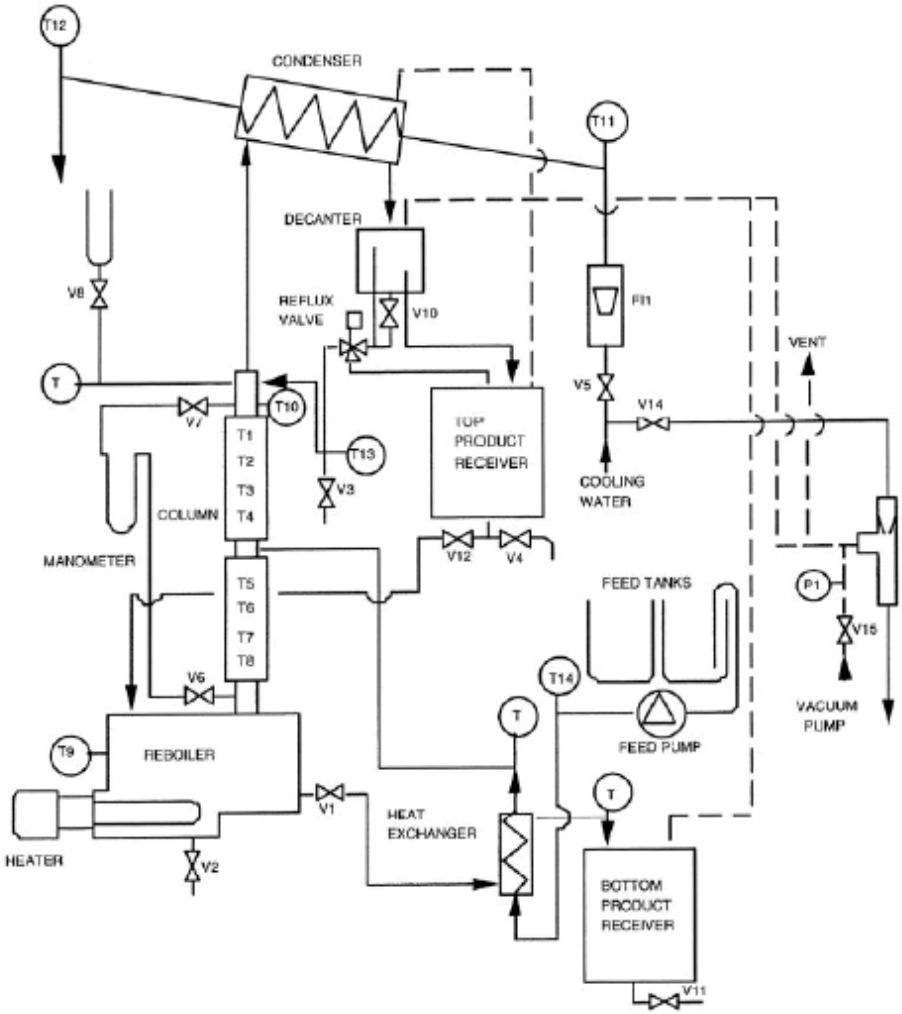

Figure 4. The schematic diagram of the device

Condenser

Vapour from the top of the column passes to a water-cooled, coil-in-shell condenser (8), which may be fitted with an insulated jacket to allow heat balances to be carried out. (The insulated jacket should not be fitted to the condenser for normal operation.) The shell of the condenser incorporates a pressure relief valve (PRV1) to protect the system in the event of a blocked vent and cooling water failure. Cooling water enters the condenser at a regulated rate through a variable area flowmeter (FI1) and the flowrate is controlled by diaphragm valve (V5). A cooling water supply is connected to the inlet nozzle (19) and serves also to operate the vacuum pump (20) when operation at reduced pressure is required. Water supply to the vacuum pump is controlled by valve (V14), which must only be operated when valve (V5) is open.

Decanter

Condensate is collected in a glass decanter (11) (phase separator) which is by-passed for normal distillation experiments by opening valve (V10). When the decanter is in use (separation of two immiscible liquids as condensate), valve (V10) is closed so that the overflow (25) and underflow (26) pipes inside the vessel, can take effect.

With valve (V10) open, condensate from the condenser outlet passes directly through the decanter to the inlet of the reflux ratio control valve (12) which is a 3-way solenoid operated valve. Depending on the setting of the reflux timers, condensate is directed by the reflux valve either back to the top of the column or to the top product collecting vessel (10). When directed to the column, the reflux passes through a U-seal where a valve (V3) can be used for measuring boil-up rate or for draining the U-seal. The contents of the top product tank (10) can be drained into the reboiler (13) for re-use via valve (V12).

Thermocouples
Temperatures within the system are monitored by fourteen thermocouple sensors (T1 to T14) located at strategic positions in the system. T1 to T8 are located in the column and measure the temperature of the liquid on each sieve plate. There are seventeen locations for the temperature sensors, three of which do not have sensors installed but which can be fitted with sensors moved from other, less relevant locations when necessary.

Manometer
The total pressure drop across the column is indicated on a U-tube manometer (ΔP1) via appropriate tappings in the column fitted with isolating valves (V6) and (V7).

Product Receiver
All of the vessels in the system are connected to a common vent on the top product receiver. This vent is normally connected through a 4.0m length of tubing to a fume cupboard or safe atmospheric vent outlet.

Control Console
The console is attached to the process unit by an umbilical cable which is of adequate length to allow the console to be positioned at least 2.0m away (outside the “Zone 2” area).

EXERCISE A - VARIATION OF COLUMN PRESSURE DROP

Objective
To determine the variation with boil-up rate of pressure drop over the distillation column.
Method
By setting the equipment to operate at total reflux (meaning all the formed vapour returns to the column after condensation); the pressure drop over the distillation column is then measured for a variety of different boil-up rates.
Equipment Required
10-100 ml measuring cylinder graduated in ml
Stopwatch (or similar timing device)
Theory
The total pressure drop across each tray is the sum of that caused by the restriction of the holes in the sieve tray, and that caused by passing through the liquid (foam) on top of the tray.
As the velocity of the vapours passing up the column increases then so does the overall pressure drop. The velocity is controlled by varying the boil-up rate which is done by varying the power input to the reboiler. Under conditions with no liquid present, the sieve trays will behave like an orifice in that the pressure drop will be proportional to the square of the velocity. Due to the fact that there is a liquid head however, this square relationship does not become apparent until the head of liquid has been overcome and foaming is taking place. In a graph of pressure drop vs. boil-up rate (log/log), at low boil-up rates the pressure drop will

remain fairly constant until foaming occurs when the pressure drop would be expected to rise sharply for unit increases in boil-up rate.

Equipment Set Up

Set the equipment to operate at total reflux by switching off the reflux ratio timer on the console.
Ensure all valves on the equipment are closed.
Open valve V10 on the reflux pipe.
Load the 10 litre charge of prepared feed mixture (the liquid to be distilled) directly into the reboiler through the filler cap provided. Make sure the filler cap on the top of the reboiler is firmly replaced.

Procedure

Turn on the power to the control panel.
Set the temperature selector switch to T9 (the temperature in the reboiler).
Open valve V5 until the cooling water flow rate FI1 to the condenser is approximately 3 litres/min.

On the control panel, turn the power controller clockwise until a reading of approximately 0.75kW is obtained on the digital wattmeter. The contents of the reboiler will begin to warm up and this can be observed on the temperature readout meter.

Open valves V6 and V7 which connect base and top of the distillation column, respectively, to the manometer. Initially there will be no pressure difference in the column meaning no reading on the manometer. Close valve V6 and V7.
The 1st and 5th plates in the column sections are not insulated so that observation of the sieve plates is possible. Make notes on the appearance of these trays throughout the distillation process.
Eventually, vapour will begin to rise up the column and the progress of this can be clearly observed as well as detected by the increasing temperatures when switching the temperature selector on T8, T7, T6, T5, T4, T3, T2 and T1. Vapour will enter the condenser and reappear as droplets into the glass walled distillate receiver vessel (11). The distillate will build up a small level in the receiver and eventually overflow to the reflux regulator valve (12). Since the valve is not on (on the control panel), and it will not be necessary to have it on in this experiment, which is run under total reflux, the condensed vapour will return to the column.
The cool distillate is then returning on the top of the column, and will cascade down the trays forming a liquid level on the trays and bubbling of vapour passing through the liquid. The system will have reached an equilibrium condition when the temperatures T1, T2, T3, T4, T5, T6, T7 and T8 are constant.
Measure the boil-up rate by performing a timed volume collection: Operate valve V3 so that all the condensate is diverted into a measuring cylinder, and use the stopwatch to measure the time required to collect a set quantity. This will not disrupt the equilibrium conditions in the column provided a liquid level is maintained in the condensate feeding pipe. When taking a sample, partially open valve V3 and drain the condensate (in a separate measuring cylinder) from the reflux system until a steady flow is obtained. Start sample collection and timing at the same time, and collect a sizeable amount. After taking the samples, take readings of pressure drops over both the rectifying (top) and the stripping (bottom) sections by opening the valves V6 and V7 on the manometer. When opening the valves, make sure always to open valve V6 then V7 to prevent vapor from the column entering the manometer. If this happens, it can be seen as two separate phases in the U-tube. Close the valves in the same order after taking the pressure drop reading.

Step up the boil-up rate in 250 Watt increments up to maximum 1.5 kW by adjusting the boiler heater power controller (on the control panel). Take similar readings of the boil-up rate and pressure drops, after having allowed at least 10 minutes for the column to stabilise.

Results

Tabulate your results under the following headings:

Power (kW)	Boil-up rate (litres/hr)	Pressure drop (cm H2O) top bottom overall	Degree of foaming on trays
0.50			
0.75			
1.00			
1.25			
1.50			
1.75			

The column headed 'Degree of Foaming on Trays' should be filled in using descriptive words, e.g. 'none', 'gentle localised', 'violent localised', 'foaming gently over whole tray', 'foaming violently over whole tray', 'liquid flooding in column'.

From the results, plot the curve relating pressure drop as a function of boil-up rate on log/log graph paper.

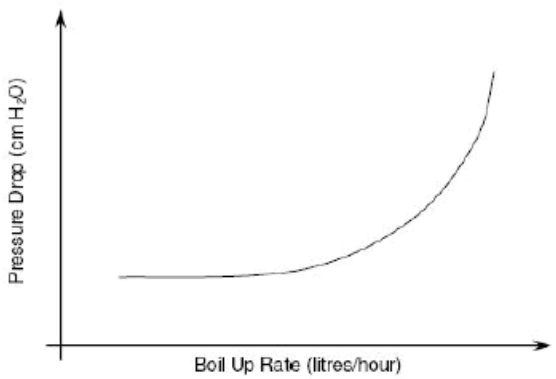

EXERCISE B - DETERMINING MIXTURE COMPOSITIONS

Objective

To use a refractometer to determine mixture compositions.

Method

A selection of difference mol percentage binary mixtures are made up and the refractive index of each is measured.

Theory

For the system methanol/water, mixtures of known concentration can be made up and their refractive indexes measured. The refractometer measures the critical angle of the liquid under test and each concentration will show a different critical angle.

Procedure
Using the refractometer, measure the refractive index (R.I.) of pure methanol and pure water (follow the manufacturer's instructions for the refractometer to be used).
Measure the R.I. of the 25%, 50% and 75% mol percent methanol/water mixtures.

Results
Tabulate your measurements under the following headings:

Methanol concentration	Refractive Index (RI)
100%	
75%	
50%	
25%	
0%	

Plot a graph of refractive index versus mol percent methanol in the methanol/water mixture.

Conclusion
The results obtained from this experiment allow the mixture composition to be determined from a measurement of the refractive index. For any mixture composition of these two constituents, measure the refractive index (plotted on the y-axis) and read off the composition (from the x-axis). Comment on the probable accuracy of the graph obtained, and suggest how accuracy could be improved.

EXERCISE C - OVERALL COLUMN EFFICIENCY

Objective
To determine the overall column efficiency.
Method
To operate the column over a range of boil-up rates, taking samples across the range in order to measure the refractive index (and hence to determine the concentration of the components).
Equipment Required
Stop watch or similar timing device
Hand held refractometer (not supplied)
Refractive index/concentration calibration graph from Exercise B
Theory
To calculate the number of theoretical plates for a given separation at total reflux, Fenske developed the following formula:

$$n + 1 = \frac{log\left[\left(\frac{x_A}{x_B}\right)_d \left(\frac{x_B}{x_A}\right)_b\right]}{log(\alpha_{AB})_{avg}}$$

where
n = number of theoretical plates
xA = mole fraction of more volatile component
xB = mole fraction of least volatile component
aavg = average relative volatility
Subscripts D, B indicate distillate and bottom respectively.

The efficiency is given by

$$E = \frac{Number\ of\ theoretical\ plates}{Number\ of\ actual\ plates} \times 100\%$$

Knowing the composition of distillate and bottom and the corresponding volatilities, the column efficiency can be determined.

Procedure

Set the heat controller high then reduce heat as reflux is introduced to give steady bubbling on all tray and total reflux.

Leave the apparatus for at least 30 minutes so that the system can reach an equilibrium condition.

Equipment Set Up

Set the equipment to operate at total reflux by switching off the reflux ratio timer on the console.

Load the 10 litre charge of prepared feed mixture (the liquid to be distilled) directly into the reboiler through the filler cap provided. Make sure the filler cap on the top of the reboiler is firmly replaced. At total reflux there will be no feed or top product or bottom product.

Procedure

Set the heat controller high then reduce heat as reflux is introduced to give steady bubbling on all tray and total reflux.

Leave the apparatus for at least 30 minutes so that the system can reach an equilibrium condition.

Measure the boil-up rate by performing a timed volume collection: Operate valve V3 so that all the condensate is diverted into a measuring cylinder. First take a small discarding sample of 5 to 10ml into an alternative vessel, then divert the condensate into the measuring cylinder and use the stopwatch to measure the time required to collect a set quantity. This will not disrupt the equilibrium conditions in the column provided a liquid level is maintained in the condensate feeding pipe. When taking a sample, partially open valve V3 and drain the condensate (in a separate measuring cylinder) from the reflux system until a steady flow is obtained. Start sample collection and timing at the same time, and collect a sizeable amount. Repeat the measurement three times and take an average value to determine the boil-up rate.

After the representative sample has been taken, keep the sample glasses in an upright position. Do not overturn them because of the possibility of evaporation of the sample. Dispose of the discarding samples in a safe manner.

Measure and record the refractive index for the overhead samples taken.

Following a similar procedure, take a sample of the bottom through valve V2.

CAUTION! THIS SAMPLE WILL BE HOT!

Record the refractive index for this sample, too.

Repeat this procedure every ten minutes until five samples of both overhead and bottom are obtained. Record the temperatures T8 and T1 to calculate the average column temperature. Repeat this procedure for several different boil-up rates to cover over the operating range of the column.

The calibration graph developed in Experiment B can be used to determine the concentrations of the components in the taken samples.

Results

Boil-up rate = _____litres/hour.

Overhead Composition (XA)d = mol percent methanol

a)

c)

d)

e)

Average = _____mol percent methanol

Bottom Composition (XA)b =

a)

b)

c)

d)

e)

Average top column temperature = _____ °C

Average bottom column temperature = _____ °C

Average column temperature = _____ °C

Calculate theoretical number of plates, n, using Fenske's equation and determine average column efficiency, E.

EXERCISE D - DISTILLATION AT CONSTANT REFLUX RATIO

Objective

To carry out a distillation at constant reflux ratio, varying top and bottom compositions with time.

Equipment Required

10-100 ml measuring cylinder graduated in ml

Stop watch (or similar timing device)

Refractometer

Refractive index/concentration calibration graph from Exercise B

Theory

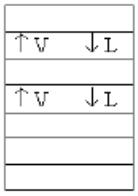

Since there is no feed, no bottom product or no top product, the liquid flow in the column is equal to the vapour flow in the column:

V = L

A material balance over the M.V.C. (most volatile component) gives

V yn = L xn+1

Since V = L this gives

yn = Xn+1

Equipment Set Up

Set the equipment to operate at total reflux by switching off the reflux ratio timer on the console.
Load the 10 litre charge of prepared feed mixture (the liquid to be distilled) directly into the reboiler through the filler cap provided. Make sure the filler cap on the top of the reboiler is firmly replaced. At total reflux there will be no feed or top product or bottom product.

Procedure

Set the heat controller high then reduce heat as reflux is introduced to give steady bubbling on all tray and total reflux. Leave the apparatus for at least 15 minutes so that the system can reach an equilibrium condition.
This experiment is run at varying reflux ratios. Set the reflux controller to the desired values e.g. start with 5:1 by setting 20 sec back to column and 4 sec to top product receiver. The setting is like the setting of a digital watch. C- means back to column and C+ means to top product receiver. When this is done, switch the reflux valve on (on the control panel). You should also see condensed vapour flowing to the top product receiver.
Measure the boil-up rate by performing a timed volume collection: Operate valve V3 so that all the condensate is diverted into a measuring cylinder. First take a small discarding sample of 5 to 10ml into an alternative vessel, then divert the condensate into the measuring cylinder and use the stopwatch to measure the time required to collect a set quantity. Thiswill not disrupt the equilibrium conditions in the column provided a liquid level is maintained in the condensate feeding pipe. When taking a sample, partially open valve V3 and drain the condensate (in a separate measuring cylinder) from the reflux system until a steady flow is obtained. (Ensure that liquid remains in the flexible connecting tube to prevent vapour from escaping.) Start sample collection and timing at the same time, and collect a sizeable amount. Repeat the measurement three times and take an average value to determine the boil-up rate.
Take a sample of the overheads through valve V3. When doing so be careful never to drain the condensate return line, i.e. partially open valve V3 to leave a small amount of liquid in the line all the time.
Generally, when taking samples, drain a “discarding” sample of approximately 5 to 10 ml before taking the representative sample in a sample glass. Do not drain too much of the “discarding” sample because of the disturbance of the mass balance. Discard the “discarding” sample in a safe way. After the representative sample has been taken, keep the sample glasses in an upright position. Do not overturn them because of the possibility of evaporation of the sample.
Record the refractive index for the taken overhead sample. In a similar manner **and preferably at the same time** take a sample of the bottom through valve V2.

CAUTION! THIS SAMPLE IS HOT!

Record the refractive index for this sample too.
Repeat this procedure every ten minutes until five samples of both overhead and bottom are obtained. Record the temperatures T8 and T1 to calculate the average column temperature. Repeat this procedure for different reflux ratios.
Repeat the whole procedure for several different boil-up rates to cover over the operating range of the column.
The calibration graph developed in Experiment B can be used to determine the concentrations of the components in the taken samples.

Results

Top Product Composition **Mol Percent methanol**	**Bottom Product Composition** **Mol Percent methanol**

Calculations

Take several samples from the top and bottom samples, read their refractive index and read the methanol concentrations in the samples using the calibration curve. Repeat the experiment for different reflux ratios. Calculate the theoretical number of plates and column efficiencies.

Discussion

What is the effect of power supplied to the boiler on boil-up rate, pressure drop in the column, foaming within the column? Comment on the relationship observed, if any, between boil-up rate and pressure drop. Draw the graph and discuss the effect of boilup rate on pressure drop. Relate the descriptive comments observed to zones on the curve you have drawn. Is there any obvious relationship between boil-up rate and column efficiency? How does the efficiency of the column compare to full-scale columns in use in industry? Discuss the effect of reflux ratio on column efficiency.

Reference:

ARMFIELD, Continuous Distillation Column Instruction Manual, Sept., 2015.